Atlantium®
Hydro-Optic Water Disinfection System

Maintenance Guide
for the
RZ163 Series

Atlantium
Illuminating Water Technologies

Copyright © 2010 Atlantium Technologies Ltd. All rights reserved.

- Publication Catalog No. PBF003400, Revision A
- System and accessory specifications subject to change without notice

Atlantium and the Atlantium Logo are Trademarks and/or Registered Trademarks of Atlantium Technologies Ltd., its subsidiaries or affiliates in the United States and/or other countries. *All other company or product names are the trademarks or registered trademarks of their respective holders.* All rights not expressly granted are reserved.

The information contained in this document is proprietary and confidential information of Atlantium. Any unauthorized reproduction, use or disclosure of this material, or any part thereof, is strictly prohibited. This document and information is intended solely for authorized Atlantium's customers as permitted by Atlantium and for the limited purposes set forth herein.

UL and HydroQual compliances are model dependent.

For more information please visit Atlantium's website at: http://www.atlantium.com/

Contact information for equipment manufacturer and technical services:

Atlantium ltd.
Har Tuv Industrial Park
P.O.B. 11071
Bet Shemesh 99100, Israel
Tel: + 972-2-992-5001
Fax: + 972-2-992-5005

UL 508, UL 1563
E113027

TABLE OF CONTENTS

Scope of this Manual 5
System Maintenance 6
Introduction 6
Preventive Maintenance Program 6
Program A: Maintenance Performed Once A Week 7
Program B: Maintenance Performed Once A Month 7
Program C: Maintenance Performed Every Three Months 8
Program D: Maintenance Performed Once A Year 8
Program E: Maintenance Performed at Non-Scheduled Intervals 8
Cleaning the Reactor 9
CIP (Cleaning-In-Place) 9
Required Equipment and Chemicals for CIP 9
Selecting the Correct Chemicals for CIP or COP 10
CIP Process 13
Sensor Calibrations 16
Calibrating the Sensors 16
UV Lamp Intensity Sensor (UVIS) Calibration 16
UVT Analyzer Sensor Calibration 18
Replacing the Sensors 19
UV Lamp Replacement Procedure 20
UV Lamp Usage Statistics 24
Cleaning/Replacing the UV Lamp's Quartz Sleeve 25
Cleaning the UV Lamp Sensor's Mirror 27
Electrical Cabinet Air Filters Replacement/Cleaning 28
Troubleshooting 29
Troubleshooting Guide: Reactors RZ163-11 & RZ163-12 30
Troubleshooting Guide: Reactors RZ163-13 through RZ163-24 34
Spare Parts List 37
System Specifications 38
UV Safety 38
Introduction 38
Operator Training 38
Safety Precautions 38
UV Light Hazard 39
Ocular Hazards and Safety Considerations 39
Electrical Hazards and Safety Considerations 39
Toxic Hazards and Safety Considerations 40
UV Lamp Disposal 41
System Safety Features 41
UV Protective Seal 41
Emergency Stop Button 41
Software Safety Controls 42
Schematic Diagrams 42

TABLE OF FIGURES

Figure 1: Recommended CIP Setup 12
Figure 2: Sensor Calibration Windows 16
Figure 3: UV Lamp Sensor Calibration Window 16
Figure 4: UVT Monitor Calibration Window 18
Figure 5: Replacing the Sensors 19
Figure 6: UV Lamp Replacement (1) 21
Figure 7: UV Lamp Replacement (2) 21
Figure 8: UV Lamp Replacement (3) 22
Figure 9: UV Lamp Replacement (4) 23
Figure 10: UV Lamp's Breather Caps 23
Figure 11: Replacing the UV Lamp's Quartz Sleeve (1) 25
Figure 12: Replacing the UV Lamp's Quartz Sleeve (2) 26
Figure 13: Cleaning the UV Lamp Sensor's Mirror 27
Figure 14: Air Filter Access 28
Figure 15: Error Message 29
Figure 16: Atlantium RZ163-11 Reactor Schematic Diagram (Single Branch / Single Lamp) 43
Figure 17: Atlantium RZ163-12 Reactor Schematic Diagram (Single Branch / Two Lamps) 44
Figure 18: Atlantium RZ163-13 Reactor Schematic Diagram (Single Branch / Three Lamps) 45
Figure 19: Atlantium RZ163-14 Reactor Schematic Diagram (Single Branch / Four Lamps) 46
Figure 20: Atlantium RZ163-22 Reactor Schematic Diagram (Dual Branch / Four Lamps) 47
Figure 21: Atlantium RZ163-23 Reactor Schematic Diagram (Dual Branch / Six Lamps) 48
Figure 22: Atlantium RZ163-24 Reactor Schematic Diagram (Dual Branch / Eight Lamps) 49
Figure 23: Atlantium Electrical Cabinet – Modular Layout: Reactors RZ163-11/12 50
Figure 24: Atlantium Electrical Cabinet – Modular Layout: Reactor RZ163-13 51
Figure 25: Atlantium Electrical Cabinet – Modular Layout: Reactors RZ163-14 through 24 52

SCOPE OF THIS MANUAL

This guide discusses system installation aspects and procedures for the following Atlantium Hydro-Optic water disinfections systems[1]:

1. **RZ163-11**
   Single-branch reactor with a single UV lamp, with or without the ultrasound cleaning system[2].

2. **RZ163-12**
   Single-branch reactor with two UV lamps, with or without the ultrasound cleaning system[2].

3. **RZ163-13**
   Single-branch reactor with three UV lamps, with or without the ultrasound cleaning system[2].

4. **RZ163-14**
   Single-branch reactor with four UV lamps, with or without the ultrasound cleaning system[2].

5. **RZ163-22**
   Dual-branch reactor system with two UV lamps in each branch, with or without the ultrasound cleaning system[2].

6. **RZ163-23**
   Dual-branch reactor system with three UV lamps in each branch, with or without the ultrasound cleaning system[2].

7. **RZ104-24**
   Dual-branch reactor system with four UV lamps in each branch, with or without the ultrasound cleaning system[2].

[1] System configurations and specifications subject to change without notice
[2] Optional Purchase Equipment

SYSTEM MAINTENANCE

Introduction

This section contains the maintenance instructions for the Atlantium Hydro Optic Water Disinfection System (HOD). Atlantium will train local staff to perform system maintenance. All other tasks may be performed only by service personnel specifically certified by Atlantium to handle them.

Warning

- Unauthorized servicing or modification of this system in a manner not specified in this manual could expose personnel to potential electrical or other hazards.
- Improper use or adjustment of this system may invalidate the service warranty agreement.

Preventive Maintenance Program

The following offers a program of routine maintenance tasks, and an initially recommended schedule of how often they should be performed. There are tasks that are scheduled to be performed:

- **Program A**: maintenance performed once a week
- **Program B**: maintenance performed once a month
- **Program C**: maintenance performed every three months
- **Program D**: maintenance performed once a year
- **Program E**: maintenance performed at non-scheduled intervals

The final scheduling of several of these tasks need not be set with the rigidity spelled out here; but rather by the result a learning curve acquired by experience in your particular facility, based on local conditions. For example:

Example A: Cleaning In Place – the schedule in this manual recommends CIP once a month. If after the first month of operation the performance of the system is stable and the reading of the UVT analyzer is stable, you may modify the CIP schedule by extending the time between CIP procedures.

Example B: Cleaning/Replacing the Filters – the schedule in this manual recommends cleaning the air filters in the electrical cabinet every three months. You may find, if you are in a relatively low-dust, low-pollution environment, that the filters require cleaning only once every six months.

Other tasks must be performed according to the following schedule – these will be specified below as a **rigid** or **flexible** schedule item.

Following is the schedule of the maintenance tasks. Later in this section you will find detailed instruction sets for each task.

Important Note

- If specific local code or regulation requires a more stringent maintenance schedule, this takes precedent over the schedules recommended in this guide.
- The manufacturer's scheduling recommendations in this guide are not meant to replace any existing specific regulation, or the recommendations found in the EPA Guidelines (2006), Chapter 6.

Program A: Maintenance Performed Once A Week

- **UVT Analyzer Calibration** needs to be performed once a week. Instructions begin on page 18.

Important Note

The frequency of UVT analyzer sensor calibrations may be reduced after one year of experience with favorable results.

Program B: Maintenance Performed Once A Month

- **Monthly Walk-Around** – a monthly "walk-around" inspection tour of the reactor should be done once a month:

  ⇒ Check all points of the reactor for water leaks.

  ⇒ Check all electrical cables and harnesses for frayed sections or other visible damage.

  ⇒ Report any problems you find to authorized technical personnel.

- **UV Lamp Intensity Sensors Calibration** must be performed once a month. Instructions begin on page 16.

- **Cleaning In Place** (CIP) is recommended to be performed once a month. The frequency can vary according to the specific site maintenance protocol, system's performance, and UVT analyzer sensor readings. Instructions begin on page 9.

- **Manual Checking and Cleaning of the UV Lamp Sleeve(s)** – should be performed as follows (instructions begin on page 24):

  ⇒ Once a month if the system **does not** incorporate an anti-deposit cleaning mechanism.

  ⇒ Semi-annually if the system **does** incorporate an anti-deposit cleaning mechanism.

Important Note

- The monthly walk-around is a **rigid** schedule item.
- CIP is a **flexible** schedule item and can be less frequent according to the system's performance, including the UVT analyzer sensor's readings.
- Cleaning the quartz sleeve manually is a **flexible** schedule item and can be less frequent according to cleaning requirements, as reflected by the UVT analyzer sensor's readings and actual fouling (deposit) potential on the sleeve at the specific site.

Program C: Maintenance Performed Every Three Months

- **Cleaning the Electrical Cabinet Filters** should be performed every three months. Instructions begin on page 24.

Important Note

Cleaning the electrical cabinet filters is a **flexible** schedule item.

Program D: Maintenance Performed Once A Year

- **Check Ballast Cooling Fan(s)** – once a year check that air is being blown out of the fan(s) of the ballast (power supply) module(s) in the electrical cabinet.
- **Calibration of the Reference Sensor** – needs to be performed once a year by Atlantium; send the sensor to Atlantium for this calibration procedure.
- **Replacing the Electrical Cabinet Filters** needs to be performed once a year, regardless of their state. Instructions begin on page 24.

Important Note

All items in **Program D** are **rigid** schedule items.

Program E: Maintenance Performed at Non-Scheduled Intervals

- **UV Lamp Intensity Sensor Mirrors** must be cleaned every time the UV lamps are replaced. Instructions begin on page 27.
- **UV Lamp(s) Replacement** – the UV lamps must be replaced at the end of their specified life span. Instructions begin on page 20.

CLEANING THE REACTOR

The inner surfaces of the reactor are cleaned by:

- **COP** – **C**leaning-**O**n-**P**lace (in-line chemical cleaning process of the facility's entire water line)
- **CIP** – **C**leaning-**I**n-**P**lace

Important Note

If the reactor(s) is/are integrated into the facility's **COP** loop, ensure that the water flow rate through the reactor is at least 60 m^3 per hour.

If the reactor(s) is/are integrated into the facility's **COP** loop, please consult with your Atlantium service representative regarding the usage of cleaning chemicals, special instructions and recommendations. The reactor should be cleaned by COP or CIP at installation, before start-up and/or commissioning.

Important Note

- Any use of NaOH (Caustic Soda) will cause irreversible damage to the quartz material in the HOD system.
- Any use of this material requires written approval from Atlantium's application engineer.

CIP (Cleaning-In-Place)

The reactor **CIP** process involves a periodic sterilization and anti-scaling processes of the reactor's inner surfaces and quartz tube, employing an external pump-driven recirculation system with a built-in 100 liter reservoir (26.5 US gallons). The recirculation system is connected to the CIP ports, pipes and the reactor so that they become a closed-loop system, and a diluted solution is run through the system. The recirculation system is available from Atlantium as an optional **CIP Kit**.

The CIP process is expected to take 1.5 hours to perform.

Required Equipment and Chemicals for CIP

- Protective goggles, clothing and gloves (chemical-safe)
- Atlantium's CIP Kit including its accessories (Refer to the **Site Preparation Guide**)
- Antiscalant solution
- Disinfectant solution

Selecting the Correct Chemicals for CIP or COP

It is **critically important** to select the correct chemical antiscalant and disinfectant for the CIP process. They must be powerful enough to clean the inner surfaces of the reactor, while at the same time:

- Not harm the components of the reactor that it comes into contact with (stainless steel 316L, quartz and Viton® o-rings).
- Not contaminate the product for which the water being treated by the reactor is used.

The chemicals selected and the concentrations used **must** be approved for use by the facility's quality assurance and safety officials, and must comply with the written protocols and procedures set in place by those departments.

The chemicals selected must be used and handled in strict accordance with their manufacturer's instructions, product information sheets and material safety data sheets (MSDS).

Atlantium recommends the following chemicals:

1. **Antiscalant:**

- Phosphoric acid (H_3PO_4) 1.5%-2% diluted solution.
- Nitric acid (HNO_3) 2% diluted solution.
- HCl 1.5%-2% diluted solution; recommended for metal based (rust-colored) scaling.
- Sulfamic acid (H_3NSO_3) 1%-1.5% diluted solution; recommended for calcium based scaling.

2. **Disinfectant:**

- P-3 Oxonia Active 150 – diluted solution according to manufacturer's recommendation.
- Divosan Forte diluted solution according to manufacturer's recommendation.

Important Note

- The above diluted solution values denote the required dilution of the chemical circulating through the reactor!
- While calculating the diluted volumes, consider all volumes including the reactor, pipes and the recirculation tank.
- It is the responsibility of the reactor's owner/operator to use and apply the correct chemicals.
- Any use of NaOH (Caustic Soda) will cause irreversible damage to the quartz material in the HOD system; any use of this material requires written approval from Atlantium's application engineer.
- All chemicals must be obtained locally from commercial chemical suppliers.
- **Atlantium does not supply chemicals!**

How to dilute the antiscalant solution:

Calculate the amount of chemical solution to add to the CIP process as follows:

1. Add up the water volume used in the CIP process: this includes the water volume in the reactor, the pipes between the reactor and the inlet & outlet separation valves, the CIP recirculation system and the hoses between the reactor and the recirculation system. Assume (only for this explanation) that the total volume of water is 200 liters.

2. Assume that you need a 2% diluted solution in the CIP process and assume that your purchased solution is of a 35% concentration in a 4-liter container.

3. Calculation: [200 liter X 2%] / [35% X 4 liter] = [400] / [140] = 2.9 = 3 containers.

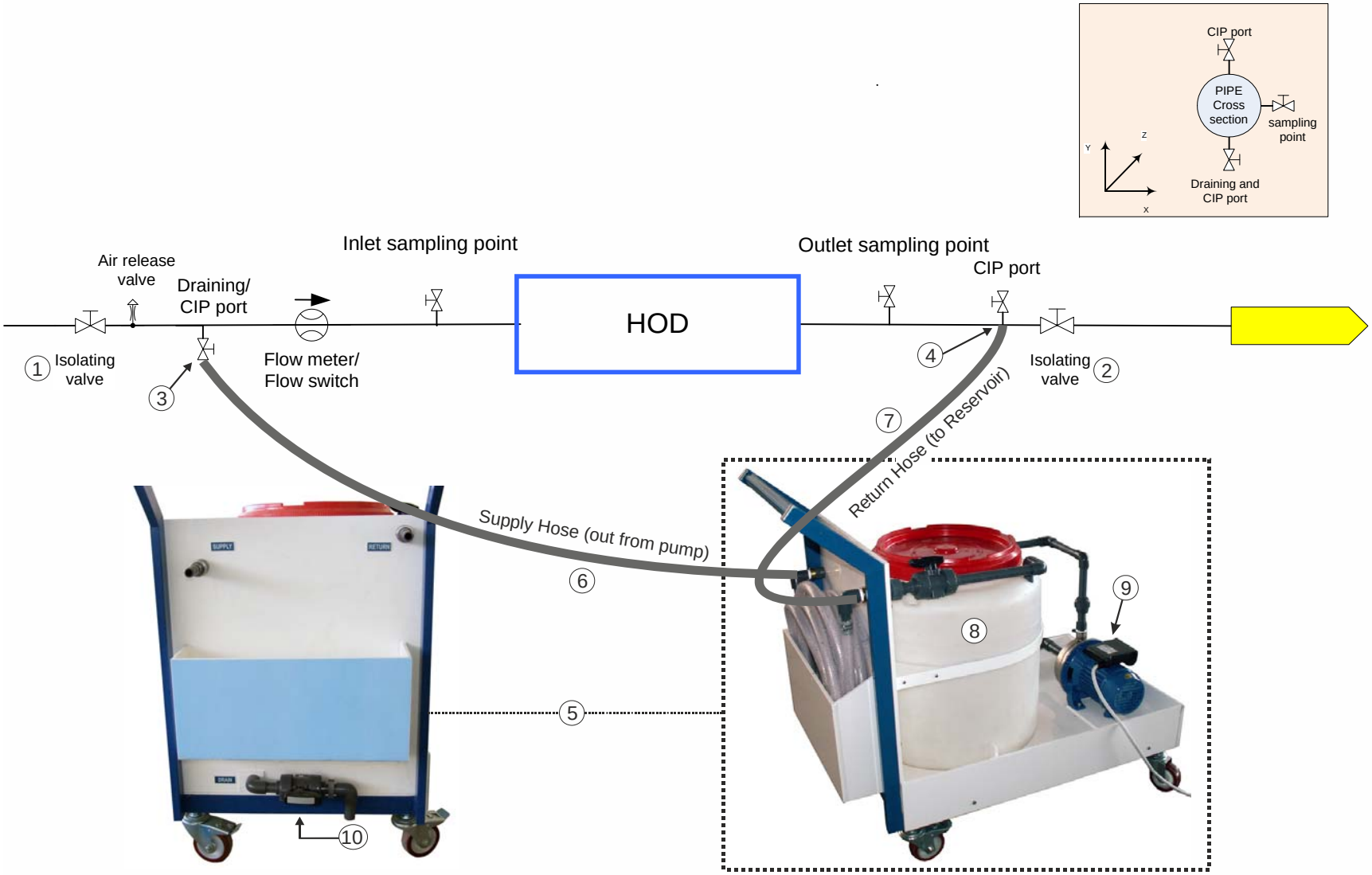

Figure 1: Recommended CIP Setup

CIP Process

The CIP process is comprised of two separate procedures: **Anti-Scaling** and **Disinfection**.

The anti-scaling procedure should be performed only if necessary. Atlantium recommends that anti-scaling always be followed by disinfection.

- If only performing disinfection: Follow steps 1 through 15.
- If performing both procedures: Follow all steps below.

Proceed as follows (refer to the numbered arrows in Figure 1):

1. Close the reactor's inlet isolating valve (**1**) and outlet isolating valve (**2**).

2. Shut down the reactor by touching the **Main Reactor Operation** button on the control panel's touch-screen, and then by turning off the main switch circuit breakers.

3. Remove the caps covering the CIP ports (**3** & **4**).

4. Connect the CIP kit's supply hose (**6**) to the port using the CIP cap's tri-clamp.

5. Connect the CIP kit's return hose (**7**) to the port using the CIP cap's tri-clamp.

6. Slightly open the reactor's inlet valve (**1**), open the CIP port on the outlet side and allow the facility's water to fill the CIP kit's reservoir (**8**). There is a fill-indicator line of the reservoir. Replenish the water in the reservoir (**8**) back up to the 100 liter level.

7. Close the reactor's inlet valve (**1**)

8. **Alternate filling option (to step # 6):** Fill the CIP kit's reservoir (**8**) with 100 liters (26.5 US gallons) of room-temperature tap water (±25°C/75°F). There is a fill-indicator line of the reservoir. Replenish the water in the CIP kit's reservoir (**8**) back up to the 100 liter level.

> ***Important Note***
>
> The reactor must be absolutely full for the solution to reach all of the inner surfaces.

9. Prepare the water in the reservoir with the **Antiscalant** solution.

> ***Important Note***
>
> If you are performing a disinfection process, prepare the water with disinfectant solution instead of antiscalant solution.

> ***Warning***
>
> Observe chemical safe rules! Follow all safety recommendations in the chemical manufacturer's product information and MSDS publications.

10. Start the CIP kit's electric pump (**9**) and allow the solution to circulate through the reactor for the period of time specified in the chemical's instructions for use, but not less than 30 minutes.

> ***Important Note***
>
> - During the circulation period open and close the sampling valve several times to assure chemical contact with the CIP chemicals.
> - If the draining valve is separated from the CIP ports – perform the same procedure on the draining valve.

Rinsing process (following the circulation period):

11. Connect the CIP recirculation system's drain valve (**10**) to the facility's sewage system.

12. Turn on the HOD system and wait until the system indicates that it is ready.

13. Close the inlet CIP port (**3**), stop the recirculation pump (**9**) and open the CIP recirculation system's drain valve (**10**).

14. Rinse cycle: slightly open the reactor inlet valve (**1**). Allow this rinsing process to operate until at least three cycles of water volume have gone through the reactor to remove all of the antiscalant/disinfectant solution. It is recommended to assure that all the chemicals are flushed by using measurable indicators such as measuring the pH, or other indicators depending on the chemical being used (consult you chemical supplier).

> ***Important Note***
>
> If you are going to perform a disinfection process after the anti-scaling procedure, continue from step 18.

15. Open the outlet valve (**2**) and close the CIP port on the outlet side (**4**).

16. Carefully open the inlet valve (**1**) completely – to avoid Hammer effect if there is air trapped in the HOD system – and resume normal operation.

17. Disconnect the CIP recirculation hoses from CIP ports and close the CIP ports with their caps.

If you are going to perform a disinfection procedure after the anti-scaling procedure, continue from here:

18. Shut down the reactor by touching the **Main Reactor Operation** button on the control panel's touch-screen, and then by turning off the main switch circuit breakers.

19. Slightly open the reactor's inlet valve (**1**), open the CIP port on the outlet side and allow the facility's water to fill the CIP kit's reservoir (**8**). There is a fill-indicator line on the reservoir. Replenish the water in the reservoir (**8**) back up to the 100 liter level.

20. Close the reactor inlet valve (**1**).

21. **Alternate filling option to step #** 19: fill the CIP kit's reservoir (**8**) with 100 liters (26.5 US gallons) of room-temperature tap water (±25°C/75°F). There is a fill-indicator line on the reservoir. Replenish the water in the CIP kit's reservoir (**8**) back up to the 100 liter level.

> ***Important Note***
>
> The reactor must be absolutely full for the solution to reach all of the inner surfaces.

22. Repeat the CIP process starting at step # 9 with disinfectant solution.

Sensor Calibrations

Access the **Calibration** screen by pressing the

button in the **Main Settings** screen; the **UV Lamp Intensity Sensor Calibration** window appears. Press the **UVT** button on this screen to access the **UVT Analyzer Calibration** window. Both windows are presented in Figure 2:

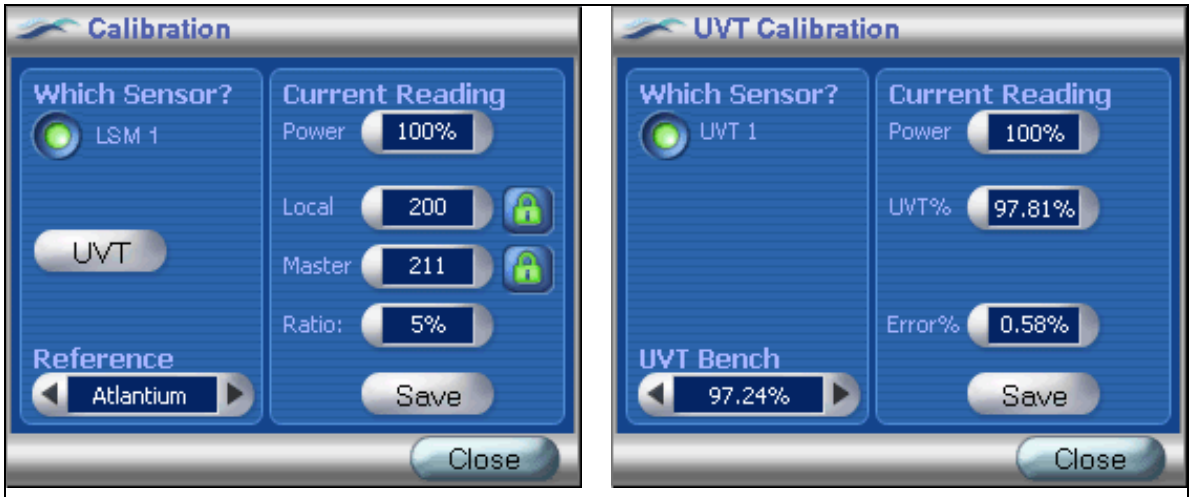

UV Lamp Sensor Calibration | UVT Monitor Calibration

Figure 2: Sensor Calibration Windows

Calibrating the Sensors

UV Lamp Intensity Sensor (UVIS) Calibration

According to EPA guidelines[3] the UVIS must be calibrated every month. The duty UV sensor should be sent to Atlantium for factory calibration or replaced every 24 months. Read the screen and proceed as follows (refer to the bullet numbers in Figure 3):

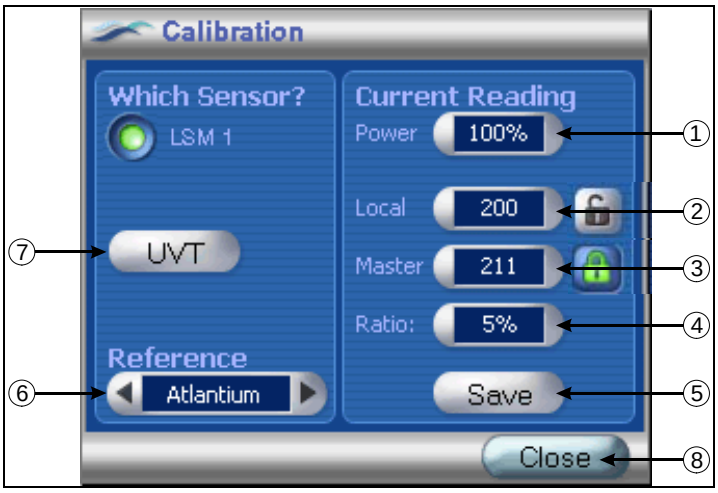

Figure 3: UV Lamp Sensor Calibration Window

[3] The Long Term 2 Enhanced Surface Water Treatment Rule (LT2ESWTR) Implementation Guidance http://www.epa.gov/safewater/disinfection//lt2/pdfs/guide_lt2_stateimplementation.pdf

1. **Power –** calibrations are performed at **100%**; this cannot be changed (**1**).

2. Touch the icon; it will look up the local reading (screen icon of the local reading changes to).

3. Make sure that **Atlantium** is selected in the **Reference** window (**6**) when you use the Atlantium-supplied reference sensor; this uses the current registered reference sensor algorithm. After replacing the reference sensor with a new one, use the remote monitoring computer's maintenance registry (if you have a remote monitoring computer).

4. After the reference sensor has been installed, touch the icon and get the **Master** sensor reading.

5. **Local –** the value in the **Local** window (**2**) displays the current reading of the sensor that is being calibrated.

6. Press the **Save** button (**5**) to save the calibration results in the software's log file

7. Disconnect and remove the reference sensor and install the duty sensor being calibrated in its place.

> ***Warning***
>
> Pay strict attention to the safety warnings and precautions in **Safety** section of the operator's manual.

8. **Calibration Results –**
   - If the two readings are identical or low, this means that the UV lamp sensor being tested has passed calibration and is performing properly.
   - If the **Master** reading (**3**) is different from the **Local** reading (**2**), the difference between the two readings will be displayed in the **Ratio** window (**4**).
   - If the ratio is more than **1.20**, the EPA guidelines recommend changing the system status to "Out of Calibration". It is recommended to replace this sensor. In systems that are defined as Municipal or PMO, an automatic correction factor will be implemented until this sensor is replaced.
   - **Replace the Sensor**: follow the sensor replacement instructions on page 19, then go to the remote monitoring computer and enter the new sensor serial number in the Maintenance Registry (if you have a remote monitoring computer).
   - Recalibrate the reactor; the system will now use the new sensor without a calibration factor.

9. Press the **UVT** button (**7**) to calibrate the **UVT Analyzer** sensor(s), or press the **Close** button (**8**) to exit the calibration window.

UVT Analyzer Sensor Calibration

According to EPA guidelines the UVT analyzer sensor needs to be calibrated every week and after one year of experience this frequency can be reduced. If calibration experience shows that the system reports UVT correctly, this frequency can be reduced. Read the screen and proceed as follows (refer to the bullet numbers in Figure 4):

1. Just prior to calibration, obtain a sample of treated water from the reactor, test it in an external spectrophotometer, and enter the test result value in the **UVT Bench** window (**1**). Configure with the ◀ / ▶ buttons.

2. **Power –** calibrations are performed at **100%**; this cannot be changed (**2**).

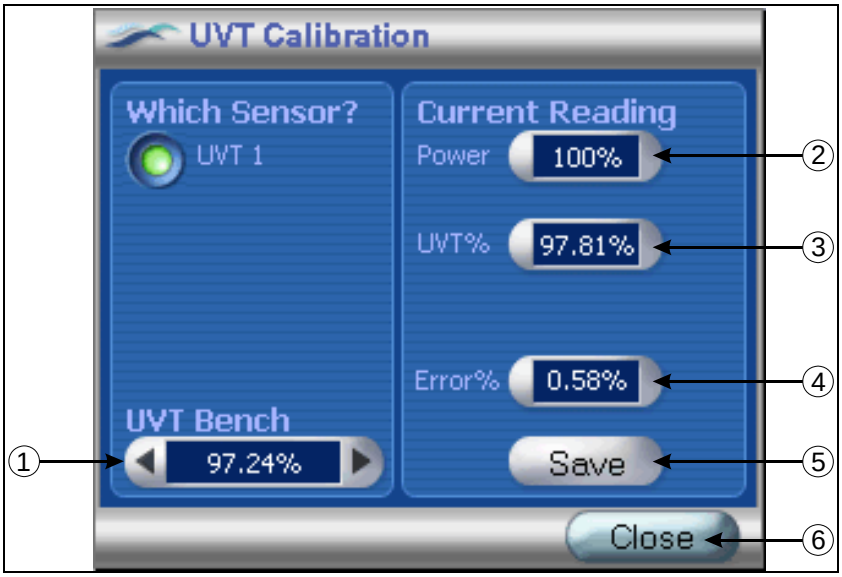

Figure 4: UVT Monitor Calibration Window

3. The **UVT%** value (**3**) shows the current UVT as measured by the system. Once the test result value obtained from step 1 above is entered in the **UVT Bench** window (**1**), the difference between the two UVT values will be shown in the **Error** window (**4**).

4. Press the **Save** button (**5**) to save the calibration results in the software's log file; the system compares the error to the allowable error and calibrates the sensor if it is out of calibration.

5. Press the **Close** button (**6**) to exit the calibration window.

Replacing the Sensors

Replacing the UVT Analyzer and UV Lamp Intensity sensors is performed in the same manner.

Refer to Figure 5:

1. Disconnect the harness connector (shown by the arrow in view **A**) by unscrewing its threaded cap.
2. Unscrew the sensor's threaded cap from the bottom of the sensor housing, as shown in view **B**.
3. Pull the sensor out of the housing (**C**).
4. Unpack the new sensor (**D**), insert it into the housing, and screw the threaded cap back into the housing to secure the sensor.
5. Reconnect the harness's threaded cap to the new sensor.

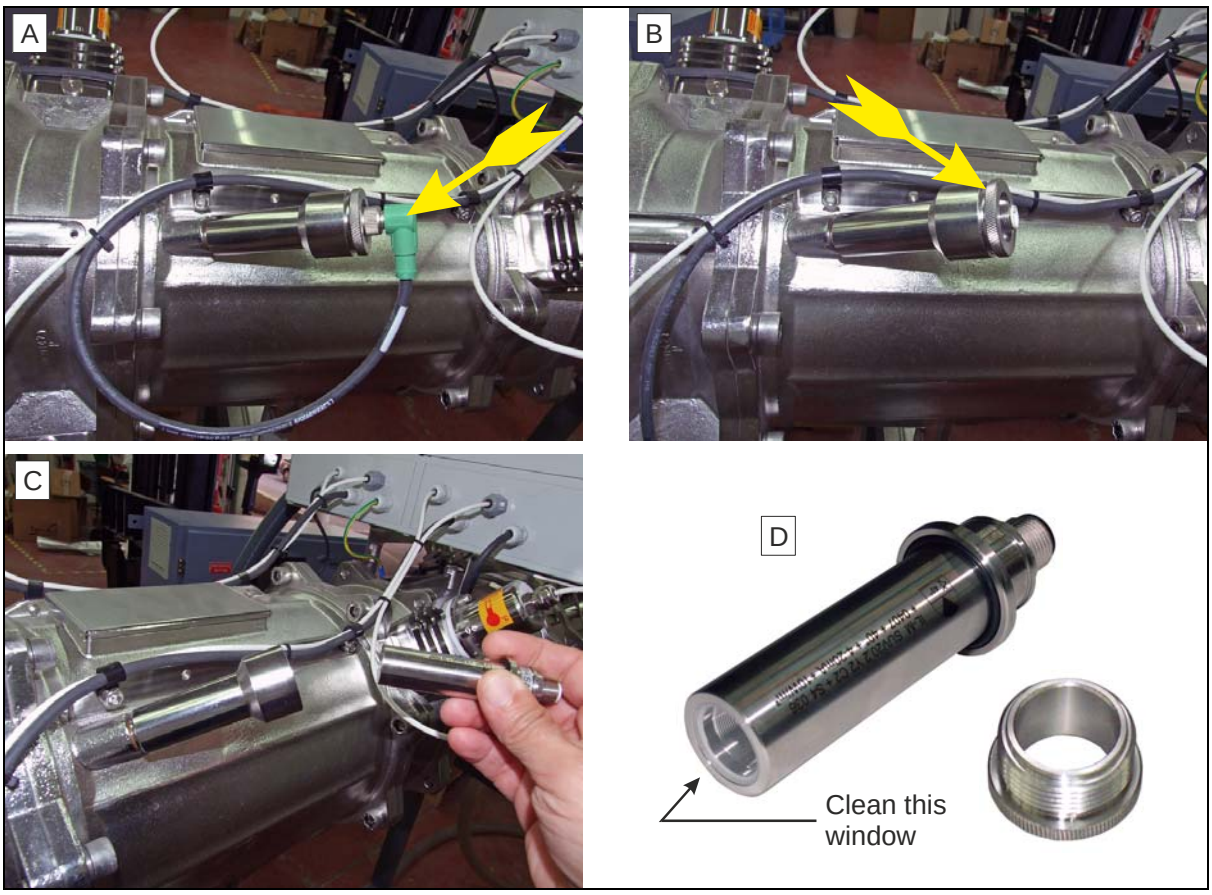

Figure 5: Replacing the Sensors

UV Lamp Replacement Procedure

Installing or replacing a UV lamp in the Atlantium reactor is a simple procedure that takes only a few minutes. Each lamp's performance is measured directly by a dedicated UV lamp intensity sensor. A lamp is replaced when its status or performance declines and the lamp no longer provides the required performance at the appropriate electrical cost (a lamp can also be replaced when its rated hours expire). The user can set a margin to assure notification as status declines and the controller will warn the operator at both the user setting level and the internally coded minimum.

Caution

- Allow the old lamp at least 15 minutes to cool down before replacement.
- To best protect the new lamp, wear white cotton gloves.
- Before installing a new lamp, verify that it is clean and free of grease. If not, rub gently with lens tissue dampened with alcohol. Do not touch the lamp with bare hands - hold it only by the end-housings. Oily residues from fingerprints can damage the lamp.

Replace the UV lamp as follows:

1. Turn off all UV lamps by pressing the **Off** button on the LCD.

2. Turn down the particular circuit breaker of the ballast for the lamp intended for replacement.

3. If desired, restart the system by pressing the **On** button on the LCD; the system may continue to operate while any one of the UV lamps is being replaced.

Warning

- Be absolutely sure you have turned off the correct lamp's circuit breaker; a severe danger of electrocution exists if the lamp is not turned off during replacement.
- The UV lamps are designed with high internal positive pressure. Wear protective eyewear while replacing a lamp. Pay strict attention to the safety warnings and precautions in the **Safety** section of the operator's manual.

4. Refer to Figure 6: use a # 4 Allen wrench to remove the four Allen screws (**1**) that secure the lamp's connector assembly (**2**) and remove the connector assembly. Each screw has two washers.

5. Gently set the connector assembly aside.

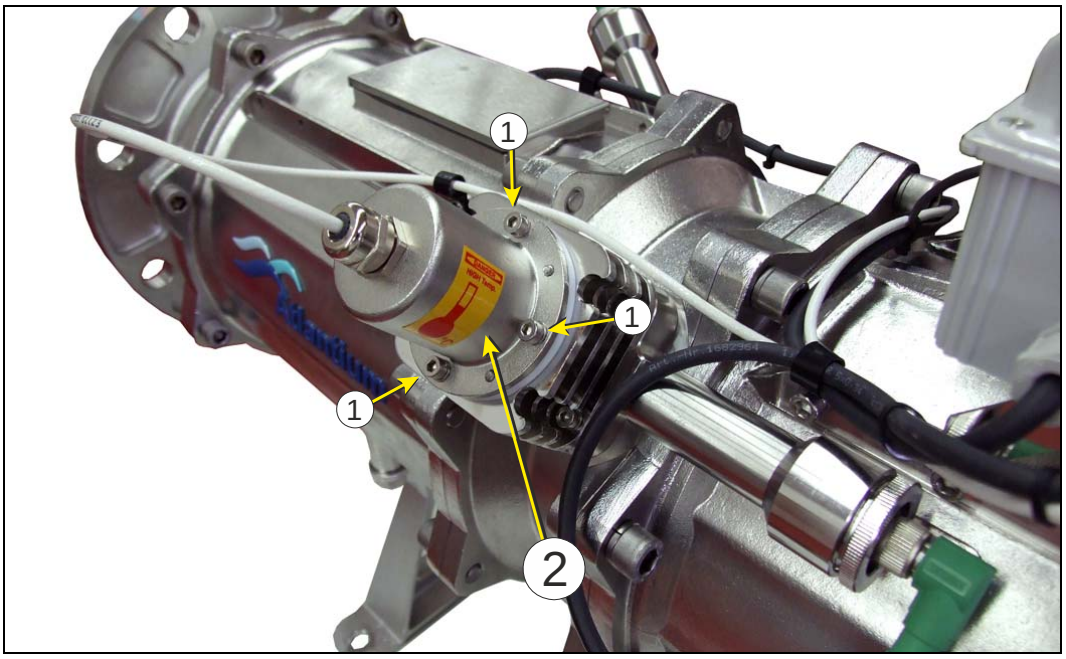

Figure 6: UV Lamp Replacement (1)

6. Refer to Figure 7: use a # 4 Allen wrench to remove the four Allen screws (**1**) that secure the lamp's housing (**2**), and remove the housing. Each screw has two washers.

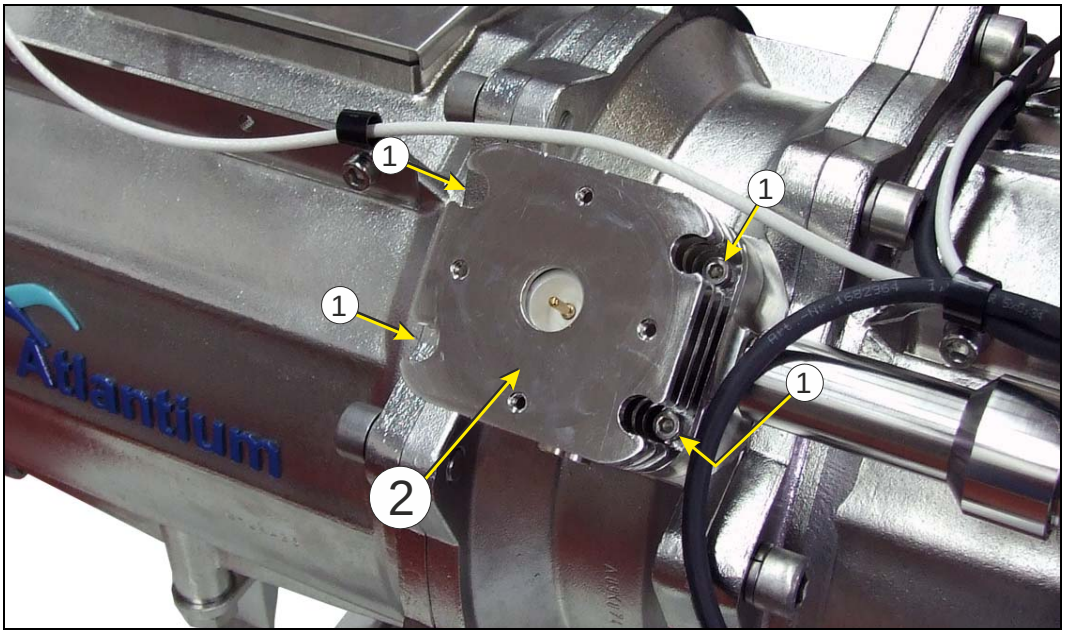

Figure 7: UV Lamp Replacement (2)

7. Pull the UV lamp straight out of the quartz sleeve in the reactor (see Figure 8) and set it aside.

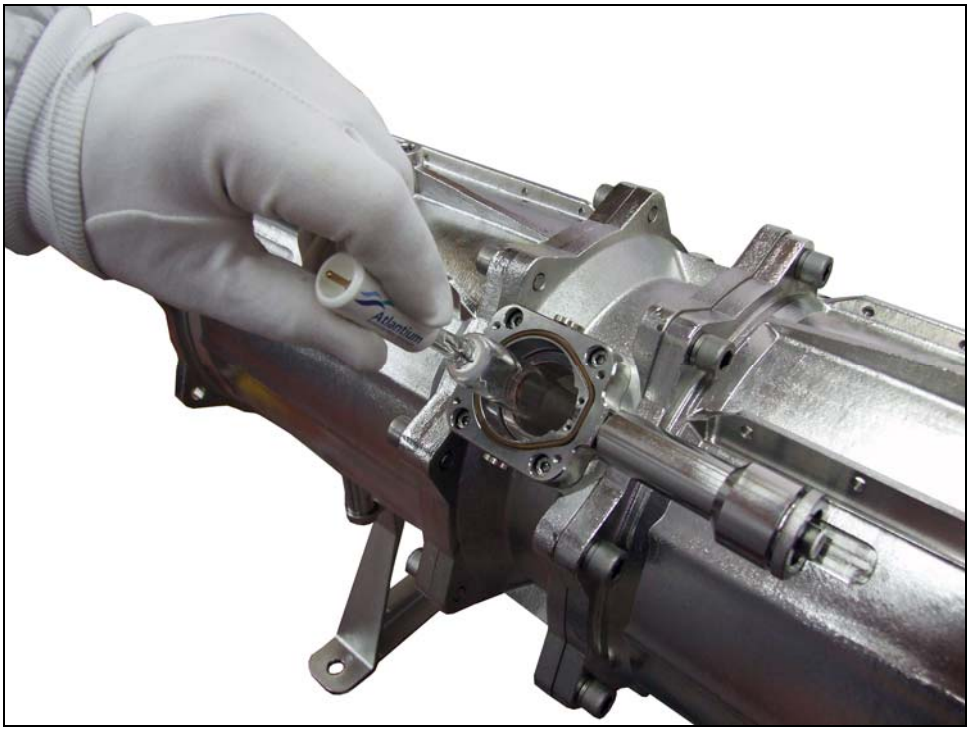

Figure 8: UV Lamp Replacement (3)

8. Unpack the new UV lamp from its vacuumed sealed package.

9. Take care not to touch the lamp with bare hands, particularly the quartz portion.

10. Insert the new lamp into the quartz sleeve in the reactor, all the way until it stops. Ensure that the male contact point on the end of the lamp has meshed with the female contact point in the lamp's housing on the other side of the reactor (see Figure 9).

11. Check that the lamp housing's O-ring is in place, clean, dry and undamaged. Replace if necessary.

12. Insert the lamp's housing that you removed in step 7 above; ensure that the male contact point on the end of the lamp has meshed with the female contact point in the lamp's housing on the other side of the reactor (see Figure 9).

Important Note

Ensure that there is no residual moisture or high humidity on the inner surface of the quartz sleeve. If any visible moisture exists, dry it before inserting or operating the lamp.

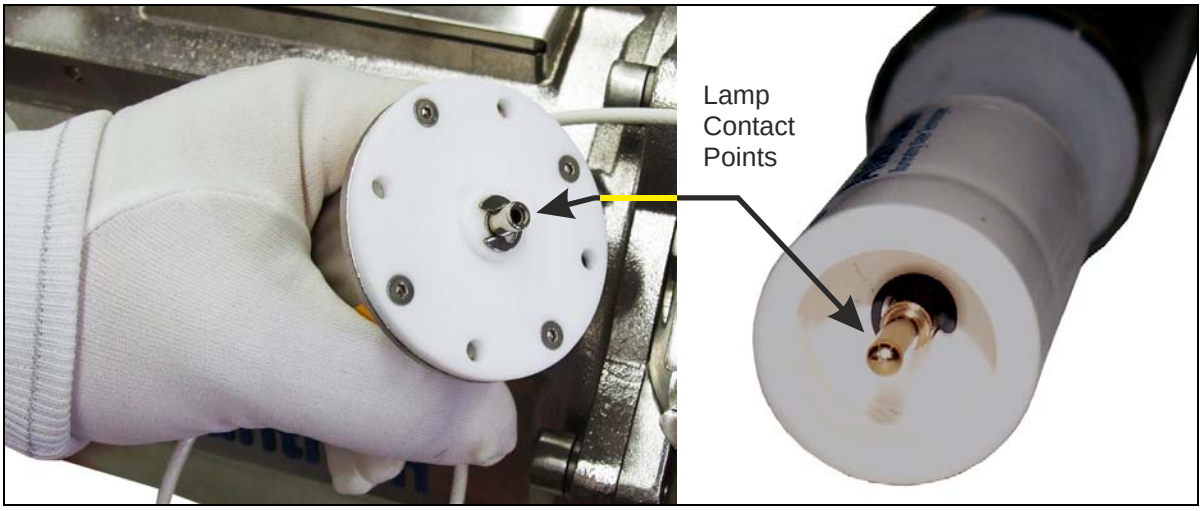

Figure 9: UV Lamp Replacement (4)

13. Fasten the housing to the reactor with its four sets of Allen screws and washers.

14. Reinstall the lamp's connector assembly that you removed in step 6 above.

15. Remove the breather caps – 2 caps on each side of the lamp (see Figure 10).

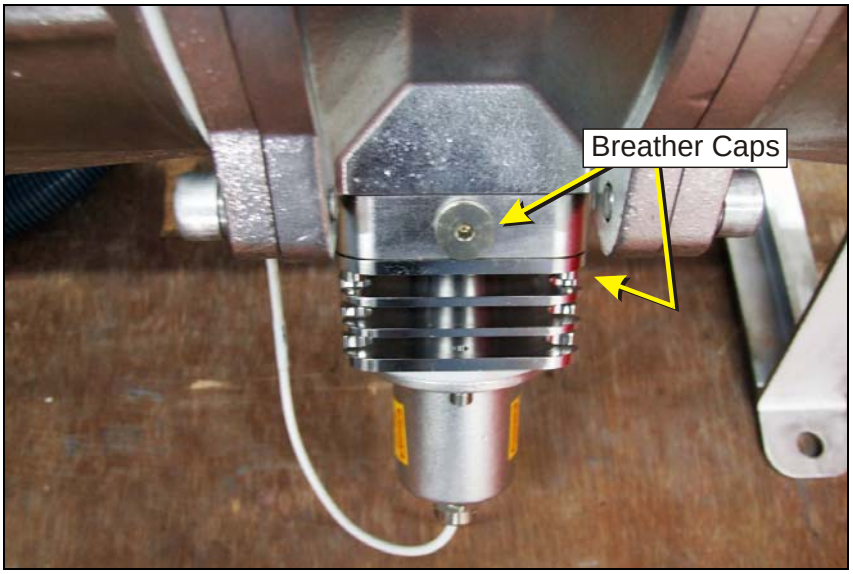

Figure 10: UV Lamp's Breather Caps

16. Power up the reactor by pulling up the main circuit breaker and check that the lamp ignites properly.

17. Operate the system without the breather caps for one hour.

18. Reinstall the breather caps.

19. Remove the UV lamp sensor and check that its window is clean and free of moisture. Clean if necessary and reinstall the sensor.

20. Calibrate the UV lamp sensor (see page 16) and the UVT sensor (see page 18).

21. Reset the lamp's usage clock:

- **RZ163-11 & 12 systems:** go to the **Configuration – Lamps** popup screen and reset the appropriate lamp's usage clock (see Figure 17 in the **User Interface Operator's Guide**, P/N # PB0002500).
- **RZ163-13** through **24 systems:** go to the **Main Operating** screen and reset the appropriate lamp's usage clock (see Figure 4 in the **User Interface Operator's Guide**, P/N # PBF003500).

22. **Enter the new lamp's serial number:** if the system is subordinated to a remote monitoring computer, go into the remote monitoring computer's **Management** screen and enter the new lamp's serial number into the appropriate reactor's **Maintenance Registry**.

23. Observe the system's efficiency for 100 hours. If after this period there is a performance degradation of more than 5%, remove the UV lamp sensor and check for humidity. Clean if necessary.

24. Re-calibrate the UV lamp sensor (see page 16) and the UVT sensor (see page 18).

UV Lamp Usage Statistics

Atlantium Technologies gathers statistics of UV lamp usage for the purpose of continuing research into improving the design, efficacy and longevity of the lamps.

Please send the following information of replaced UV lamps: system model, lamp's serial number, life span of the lamp and number of times the lamp was restarted. This information may be emailed to: support@atlantium.com.

Cleaning/Replacing the UV Lamp's Quartz Sleeve

Depending on the quality of the water being treated by the Atlantium reactor, the exterior surface of the quartz sleeve that houses the lamp(s) may require 'extra' cleaning or periodic replacement if the ultrasound cleaning system and the CIP process are not sufficient to the task. This should be determined by the quality control officer at the facility.

> ***Important Note***
>
> Before performing this procedure the Atlantium system must be turned off and drained.

1. To access the lamp's quartz sleeve you must first remove the UV lamp. Lamp removal instructions begin on page 20. After the lamp has been removed, continue from step 2 below:

2. Remove the lamp connector assembly and lamp housing (see Figure 6 and Figure 7) from the **other side** of the reactor; sleeve removal requires that both lamp connector assemblies and lamp housings be removed.

3. Refer to Figure 11: remove the four Allen screws (shown in view **A**) that secure the sleeve's holding ring to the chassis.

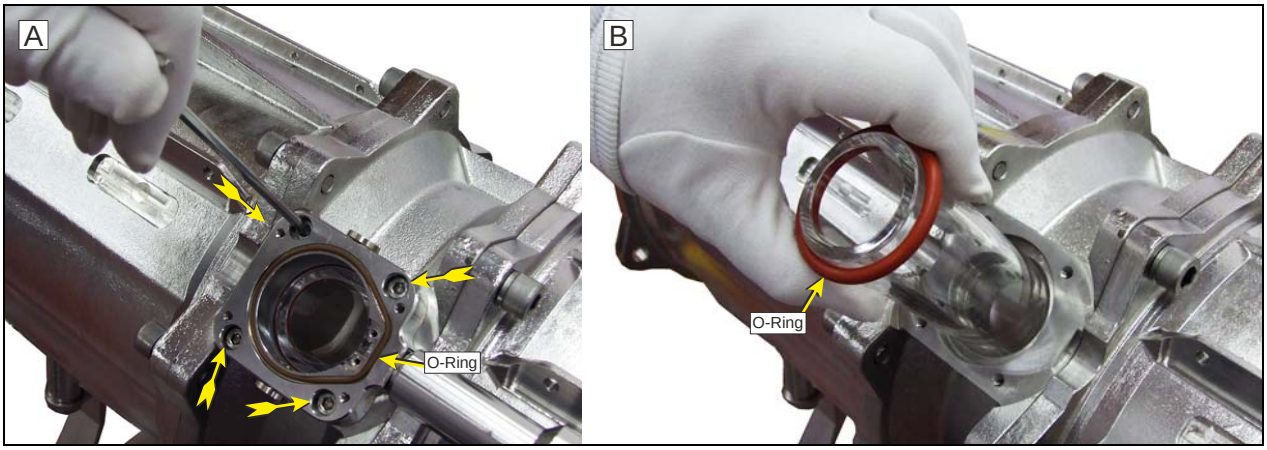

Figure 11: Replacing the UV Lamp's Quartz Sleeve (1)

4. Remove the second sleeve's holding ring from the opposite side of the chassis.

5. Push the quartz sleeve from one side through the reactor so that it comes out in your hand on the other side, as shown in view **B**.

6. If there is a sediment buildup on the sleeve's exterior surface, clean it with a mild, household antiscalant solution, and then clean the exterior and interior surfaces with alcohol. If the sleeve cannot be cleaned to a pristine condition, replace it with a new one.

7. Check the rubber o-rings of the sleeve (**B**) and of the sleeve's holding ring (**A**); replace if cracked or otherwise damaged. If the o-rings are over 6 months old – it is recommended to replace them even if they passed visual inspection.

8. Reinstall the second sleeve's holding ring from the opposite side of the chassis.

9. Remount the o-ring and insert the sleeve back into the reactor (see Figure 12).

> ***Important Note***
>
> Ensure that there is no residual moisture or high humidity on the inner surface of the quartz sleeve. If any visible moisture exists, dry it before inserting or operating the lamp.

10. Reassemble the reactor by reversing steps 1 through 5 above.

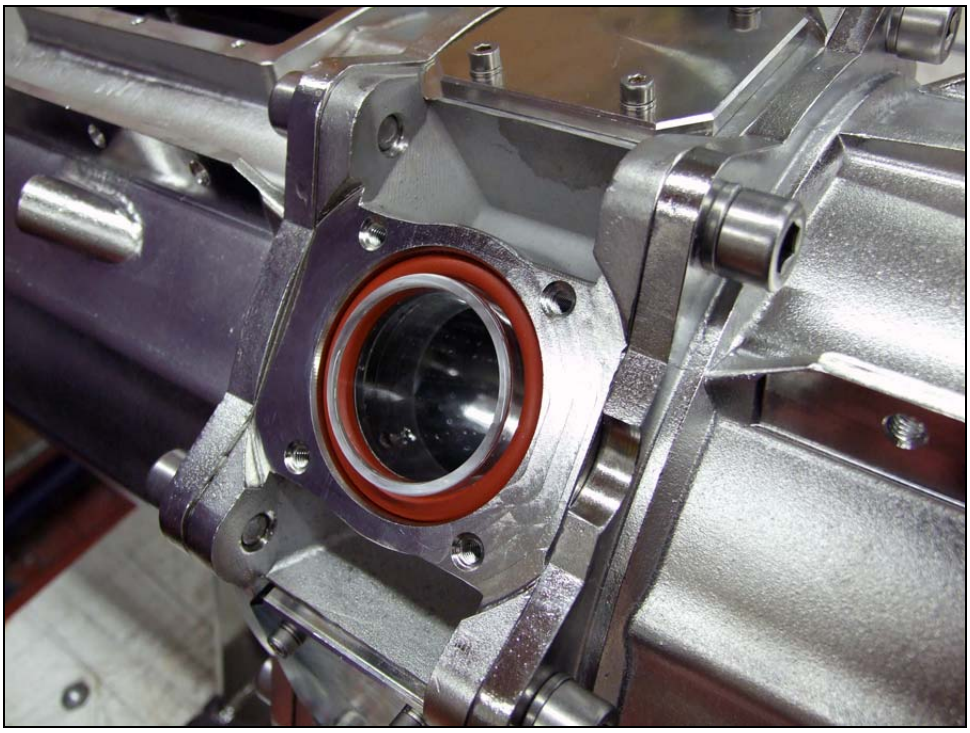

Figure 12: Replacing the UV Lamp's Quartz Sleeve (2)

Cleaning the UV Lamp Sensor's Mirror

For each UV lamp in the reactor, there is a small internal mirror for directing UV light into the monitoring sensor. These mirrors must be cleaned periodically. The best time to do this is when the UV lamps are replaced.

No particular parts need be removed from the reactor in order to access the mirror, once the UV lamp has been removed (see Figure 13).

Clean the reflective side of the mirror – the side facing into the reactor – with isopropanol and lint-free lens cleaning paper.

Ensure that the lens is completely dry before re-assembling the UV lamp.

Caution

Examine the mirror's surface after cleaning and before you close the UV lamp' housing. Fingerprints or other stains may cause erroneous UV lamp sensor readings.

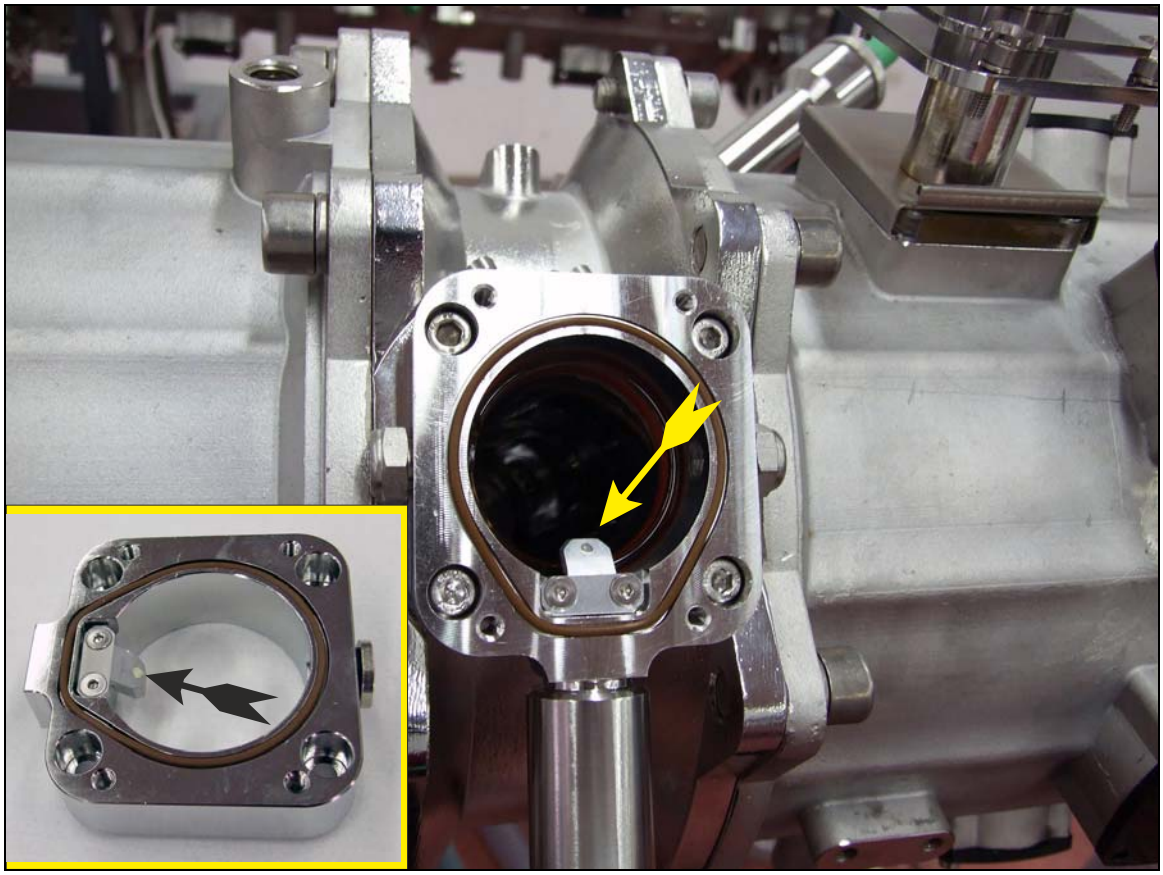

Figure 13: Cleaning the UV Lamp Sensor's Mirror

Electrical Cabinet Air Filters Replacement/Cleaning

Warning

Pay strict attention to the safety warnings and precautions in the **Safety** section of this manual.

Two air filters, one on the lower left side of the electrical cabinet and one on the upper right side, should be periodically cleaned or replaced.

Refer to Figure 14:

1. Use a small, flat screwdriver to press in and disengage the locking tab on the lower side of the plastic grill (**A**); you can now pull the grill off of its frame.

2. Remove the filter from the grill (**B**) and wash it under water with a mild detergent and a brush, or use one of the old filters as a template to cut new ones from your stock of new filter material.

3. Insert the clean (or new) filter in the grill and insert the grill back into the cabinet's panel by pushing it in until it "snaps" into place.

Important Note

If the filter has been washed, make sure it is completely dry before reinstalling it.

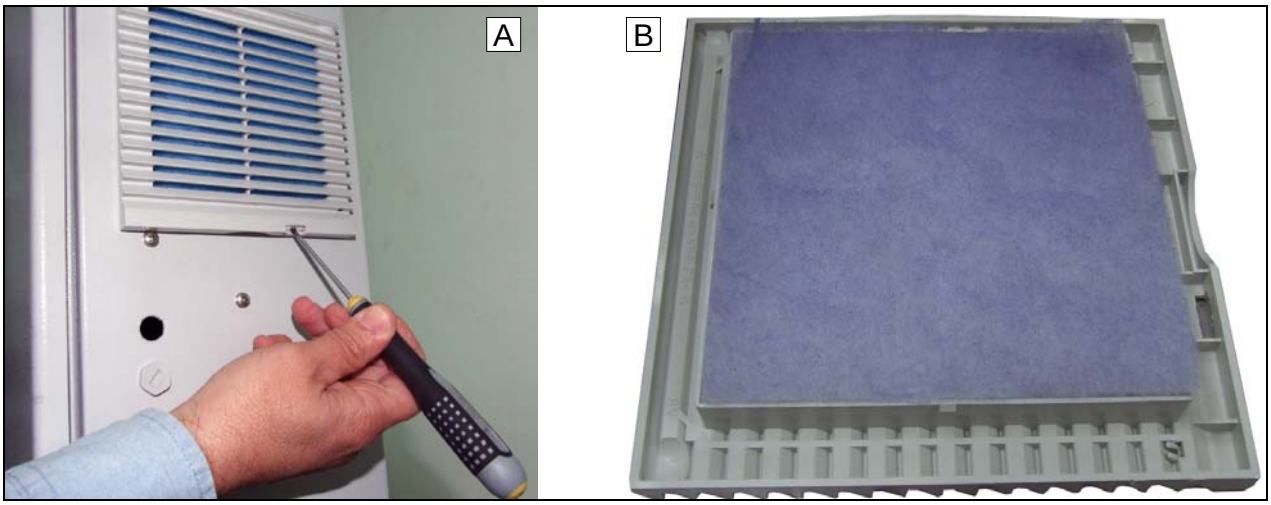

Figure 14: Air Filter Access

TROUBLESHOOTING

The Atlantium system is equipped with self-testing software that continuously monitors system operation. If a system malfunction is detected, an event message will appear on the text bar at the bottom of the LCD touch-screen (see Figure 15), and for critical events the message will be accompanied by a pop-up warning window.

Figure 15: Error Message

The troubleshooting guide starting on the next page provides a list of alarms and event messages that may be displayed, their probable causes and which corrective actions should be performed. If the corrective actions listed in the table do not solve the problem, contact your Atlantium service representative.

Troubleshooting Guide: Reactors RZ163-11 & RZ163-12

Event Message	*Event Details*	*Specific Data*	*Probable Causes/ Notes*	*Corrective Actions*	*Required Parts/Tools*
UV Dose Too High	The UV dose is above the maximum allowable in the user-defined settings. The flow is too low.	Max allowable UV dose is (x) J/cm^2. Actual UV dose delivered is (x) J/cm^2. The current flow rate is (x) m^3/hr. Increasing the flow rate to (x) m^3/hr will bring it under the minimum. Minimum allowable UV dose is (x) mJ/cm^2.	1. The current flow rate is too low. An upstream process may have obstructed the flow rate. 2. The system may be set for a constant power that is too high given the current water flow and/or quality. 3. High dose setting may be too low.	1. Check pumps, filters and system feed and increase the flow rate. 2. Check system settings; change operational mode from Power to Dose. 3. Check system settings; raise the High Dose setting	N/A
Rated Lamp Life is Expiring	The rated lifetime of the UV lamp (**xxx** hours) is ending.	UV lamp # (x) in reactor # (x) has been operating for (x) hours. Lamp has used (x) % of its rated hours. Lamp Efficiency is (x). Dose is (x).	Check the efficiency readings for this lamp. The system may be able to continue giving the required dose, but it should be watched closely and replaced as soon as the efficiency indicator turns yellow.	Replace the UV lamp (see page 20).	Atlantium UV lamp (P/N OPF000400)

Event Message	***Event Details***	***Specific Data***	***Probable Causes/ Notes***	***Corrective Actions***	***Required Parts/Tools***
Rated Lamp Life Has Expired	The rated lifetime of the UV lamp (**xxx** hours) is over.	UV lamp # (x) in reactor # (x) has been operating for (x) hours. Lamp has used (x) % of its rated hours. Lamp Efficiency is (x). Dose is (x).	Check the efficiency readings for this lamp. The system may be able to continue giving the required dose, but it should be watched closely and replaced as soon as the efficiency indicator turns yellow.	Replace the UV lamp (see page 20)	Atlantium UV lamp (P/N OPF000400)
UV Lamp Efficiency: Too Low	UV lamp efficiency is below recommended efficiency of 80%. Dose is currently OK.	UV lamp # (x) in reactor # (x) is operating at (x) % efficiency. Dose is(x).	In order to maintain the system's operational efficiency, replace the lamp.	1. Clean the window of the lamp's UV intensity sensor (see page 19). 2. Replace the UV lamp (see page 20).	Atlantium UV lamp (P/N OPF000400)
UV Lamp Failed!	The UV lamp is burnt out and must be replaced.	UV lamp # (x) in reactor # (x) must be replaced.	Replace the burnt-out UV lamp.	Replace the UV lamp (see page 20).	Atlantium UV lamp (P/N OPF000400)
Water Flow: Too Low	The rate of water flowing through the reactor is too low.	Current flow rate is (x) m^3/hr. Minimum flow required to maintain reactor operations is (x).	There may be an obstruction in the upstream system or pump malfunction. If this is a planned decrease or temporary stop, change the Low Flow mode settings from Shutdown mode to Restart; this sets the system to Standby.	Check pumps, filters and system feed and increase the flow rate.	N/A

Event Message	***Event Details***	***Specific Data***	***Probable Causes/ Notes***	***Corrective Actions***	***Required Parts/Tools***
Water Flow: Too High	The rate of water flowing through the reactor is higher than the current setting for maximum allowable flow rate. The dose is within required range.	Current flow rate is (x) m^3/hr. Current flow rate should be (x) m^3/hr. Current dose is (x) J/cm^2.	1. Water flow rate into the reactor is too high. 2. Maximum allowable flow rate is too low.	1. Decrease the rate of water flow from the facility to the reactor. 2. Increase the setting for maximum allowable flow rate.	N/A
UV Transmission Has Declined	Effective UV transmission through the water is being reduced by chemicals (chlorine, etc.) or solids (sand, silt, etc.) in the water. Dose is in the required range.	Current UVT is (x) %. Current dose is (x) J/cm^2. Minimum UVT should be (x) %.	1. Water chemical content is too high. 2. Minimum allowable UVT factor is too high.	1. Increase the UVT factor by reducing chemical content and/or filtering the solids. 2. Decrease the setting for minimum allowable UVT factor. 3. Check flow rate to assure dose stays within limits. 4. Perform the CIP process (see page 9).	N/A

Event Message	***Event Details***	***Specific Data***	***Probable Causes/ Notes***	***Corrective Actions***	***Required Parts/Tools***
UV Dose: Too Low!	The Dose Alarm has been triggered; The system will continue to operate or shut down depending on the current user settings.	Target UV dose is (x) J/cm^2. Actual UV dose delivered is (x) J/cm^2. Minimum target UV dose is (x) J/cm^2. Maximum allowable flow rate is (x) m^3/hr. Current UVT is (x) %. Minimum UVT to provide target dose at this flow (x) %. UV lamp # (x) in reactor # (x) is operating at (x) % efficiency.	1. Water flow rate is too high. 2. UVT may have declined because of chemicals (chlorine, etc.) or solids (sand, silt, etc.) in the water flow. 3. This may happen because UV lamp efficiency has dropped. 4. The system may be operating on Power mode instead of Dose mode. Change the system settings to allow higher power to respond to operating conditions. 5. Check the UVT sensor.	1. Decrease the water flow rate. 2. Perform the CIP process: operate the cleaning system and/or cleaning procedures. Try to improve the water condition; check on the filter status and upstream chemical processes. 3. Replace any deficient UV lamp (see page 20). 4. Go to the **Settings** screen and change the **Operation Mode** from **Power** to **Dose** setting. 5. Perform sensor calibration and replace UVT sensor if required. (see page 16)	For # 3: Atlantium UV lamp (P/N OPF000400)

Troubleshooting Guide: Reactors RZ163-13 through RZ163-24

Event Message	*Event Details*	*Specific Data*	*Probable Causes/ Notes*	*Corrective Actions*	*Required Parts/Tools*
Dose is Above Allowable Threshold *or* **Dose is Below Allowable Threshold**	The UV dose is above the maximum allowable in the user-defined settings. The flow is too low.	Max allowable UV dose is (x) J/cm^2. Actual UV dose delivered is (x) J/cm^2. The current flow rate is (x) m^3/hr. Increasing the flow rate to (x) m^3/hr will bring it under the minimum. Minimum allowable UV dose is (x) mJ/cm^2.	1. The current flow rate is too low. An upstream process may have obstructed the flow rate. 2. The system may be set for a constant power that is too high given the current water flow and/or quality. 3. High dose setting may be too low.	1. Check pumps, filters and system feed and increase the flow rate. 2. Check system settings; change operational mode from Power to Dose. 3. Check system settings; raise the High Dose setting	N/A
UV Lamp Has Expired	The rated lifetime of the UV lamp (**xxx** hours) is over.	UV lamp # (x) in reactor # (x) has been operating for (x) hours. Lamp has used (x) % of its rated hours. Lamp status is (x). Dose is (x).	Check the status readings for this lamp. The system may be able to continue giving the required dose, but it should be watched closely and replaced as soon as the status indicator turns yellow.	Replace the UV lamp (see page 20)	Atlantium UV lamp (P/N OPF000400)

Event Message	***Event Details***	***Specific Data***	***Probable Causes/ Notes***	***Corrective Actions***	***Required Parts/Tools***
Lamp's Power Below Threshold	UV lamp status is below recommended status of 80%. Dose is currently OK.	UV lamp # (x) in reactor # (x) is operating at (x) % status. Dose is(x).	In order to maintain the system's operational status, replace the lamp.	1. Clean the window of the lamp's UV intensity sensor (see page 19). 2. Replace the UV lamp (see page 20).	Atlantium UV lamp (P/N OPF000400)
UV Lamp Ignition Failed!	The UV lamp is burnt out and must be replaced.	UV lamp # (x) in reactor # (x) must be replaced.	Replace the burnt-out UV lamp.	1. Replace the UV lamp (see page 20). 2. Replace the lamp's ballast module (contact Atlantium Technical Support).	Atlantium UV lamp (P/N OPF000400)
Water Flow Rate: Too Low	The rate of water flowing through the reactor is too low.	Current flow rate is (x) m^3/hr. Minimum flow required to maintain reactor operations is (x).	There may be an obstruction in the upstream system or pump malfunction. If this is a planned decrease or temporary stop, change the Low Flow mode settings from Shutdown mode to Restart; this sets the system to Standby.	Check pumps, filters and system feed and increase the flow rate.	N/A
Water Flow Rate: Too High	Water rate flowing through the reactor is higher than the current setting for maximum allowable flow rate. The dose is within required range.	Current flow rate is (x) m^3/hr. Current flow rate should be (x) m^3/hr. Current dose is (x) J/cm^2.	1. Water flow rate into the reactor is too high. 2. Maximum allowable flow rate is too low.	1. Decrease the rate of water flow from the facility to the reactor. 2. Increase the setting for maximum allowable flow rate.	N/A

Event Message	***Event Details***	***Specific Data***	***Probable Causes/ Notes***	***Corrective Actions***	***Required Parts/Tools***
UV Transmission: Too Low	Effective UV transmission through the water is being reduced by chemicals (chlorine, etc.) or solids (sand, silt, etc.) in the water. Dose is in the required range.	Current UVT is (x) %. Current dose is (x) J/cm^2. Minimum UVT should be (x) %.	1. Water chemical content is too high. 2. Minimum allowable UVT factor is too high.	1. Increase the UVT factor by reducing chemical content and/or filtering the solids. 2. Decrease the setting for minimum allowable UVT factor. 3. Check flow rate to assure dose stays within limits. 4. Perform the CIP process (see page 9).	N/A

SPARE PARTS LIST

The following table presents a list of spare parts that should be kept in supply at the facility:

Part Number	Description	Specifications
CO0000026	Miniature RDT Transmitter (0-300c)	
EL0001900	Igniter	Only for RZ163-11 & 12
MME13810	LSM Coated Folding Mirror	
CO0000027	Temperature Sensor Minco S101731	
MME023900	WTM Pin Hole	
MPF009600	Transducer Cover	
PE007500	O-Ring 2-033	
PE007600	O-Ring 2-012	
MPE011300	O-Ring 2-326	
MPE011400	O-Ring 2-222	
PB000100	UV Sensor Probe (20mA)	
OPF000400	UV Lamp 155mm	
OPF004200	Quartz Sleeve 38 x 44 x 230	
SAE013300	Lamp Connector Assembly	
USF000400	US Transducer 300W	
ME013900	Window	
MPB000300	O Ring 2-442	
MPE007400	O-Ring 2-043	
CP0000003	Main Controller Model BL2600	
CP0000005	LCD Display Hitachi TFT 5.7"	Only for RZ163-12
CP0000006	LCD Display TFT 4"	Only for RZ163-11
CPF000030	LCD Display TFT 8.4"	Only for RZ163-13 through 24
S0000012	PS 24 Volts 3.2 A	Only for RZ163-11 & 12
PSF000030	2 x 2KW Ballast	Only for RZ163-13 through 24
PSF000020	3 x 2KW Ballast	Only for RZ163-13 through 24
SC000001	2KW Ballast	Only for RZ163-11 & 12
S0000100	US Generator 300W MMM	Only for RZ163-11 & 12
S0000200	US Generator 600W MMM	Only for RZ163-12
S0000300	US Generator 1200W MMM	Only for RZ163-12
APE000100	Inter-Connection PCB board	Only for RZ163-11 & 12
APF000200	Serial IO Assembled Card	Only for RZ163-13 through 24
CP0000004	RN1200 – Printed Circuit Board	Only for RZ163-12
MSE012000	Window Cover	

SYSTEM SPECIFICATIONS

Please refer to the **RZ163/PG163 Product Lines System Specifications** guide (P/N # PBF006300) to view the system specifications.

UV SAFETY

Introduction

The Atlantium Water Disinfection System has been designed according to the highest safety standards, assuring the safety of the operating personnel, the environment and the final product (purified water).

Warning

Use of controls or adjustments or performance of procedures other than those specified herein may result in ultraviolet (UV) light exposure and/or electrical hazards. Therefore, personnel operating or servicing this system must be thoroughly familiar with all safety requirements and operating procedures.

This section describes the operating safety precautions that must be adhered to with the Atlantium water disinfection system.

The major safety features of the system are also described in this section.

Operator Training

Atlantium provides in-service and training to ensure that your staff is experienced with the performance and safety considerations of the system. Atlantium strongly recommends a Safety Training Program for all personnel that will be operating and maintaining the system.

Warning

The Atlantium system is only to be operated and maintained by those adequately trained in the safe handling and operation of this system.

Safety Precautions

All persons operating the Atlantium system or in the vicinity of its operation must be aware of the potential hazards. Be certain that all personnel carefully review the following safety information. Only authorized individuals with appropriate training and knowledge should operate, assist in the operation of or provide maintenance to the system.

All service and repair of the Atlantium system must be performed only by Atlantium field service technicians or other factory-authorized personnel.

UV Light Hazard

The system generates ultraviolet (UV) light within the reactor, which can cause serious damage if any parts of the human body are exposed directly to the light, without any means of filtering or use of safety equipment.

Never remove any parts or accessories of a reactor while it is active.

Ocular Hazards and Safety Considerations

Warning

The system generates ultraviolet (UV) light within the reactor, which can cause serious eye damage or blindness.

- Identify the reactor zone clearly by posting UV light safety signs in prominent locations.
- Direct ultraviolet light can cause acute eye and epidermal injuries; the use of gloves and safety glasses is recommended in the vicinity of the system to minimize exposure from light reflection.
- All persons potentially subject to UV light exposure must wear appropriate eye protection whenever the system is operating.
- The viewing windows in the Atlantium system are designed to eliminate the escape of harmful UV radiation into the environment around the reactor and wearing protective eyewear in the vicinity during normal operation is not required, but if the facility's operating safety protocol requires protective eyewear – this protocol takes precedent.
- Never look directly into the lamp enclosure during system operation.
- Do not attempt to examine or service the system's internal components during operation, unless energized testing is required. In this case full UV-safe protective eyewear and clothing must be worn.

Electrical Hazards and Safety Considerations

The Atlantium system uses high-voltage internal components, which have the potential to cause serious injury or fatal electrical shock. The possibility exists that the high voltage components may retain a charge for some period of time even after the system has been turned off.

The operator should never attempt to remove any system covers or to dismantle any parts, except when performing maintenance procedures as described in this manual.

No portion of the system should be opened or removed by anyone other than a trained and authorized technician. Do not spray, soak or pour any type of fluid directly into the reactor or electrical cabinet as damage to the equipment and electrical shock may result. Do not operate the system if the power cables or harnesses are frayed or otherwise damaged.

Maintenance should be performed only when the system is shut down and disconnected from power. Performing maintenance procedures with the system powered up may be hazardous to the operator and destructive to the system.

Toxic Hazards and Safety Considerations

The Atlantium system is designed such that the UV lamps are completely protected from any physical stresses inside a dry, sealed enclosure within the reactor, and there is no possibility for an outside factor to come into contact with the lamp and break it. The only time a lamp could be broken is by a handling accident during a replacement procedure.

The Atlantium system's UV lamps contain mercury. The mercury contained in the UV lamp has the potential to cause serious injury if the lamp is mishandled or broken. Be careful while handling or replacing the UV lamp to ensure that the lamp is not broken or damaged. Always wear gloves and safety glasses when handling or replacing a UV lamp. Do not touch the lamp directly. Handle the lamp assembly by holding only the contact housings.

Mercury compounds are hazardous materials. Inhalation of vaporized mercury compounds can be harmful to the lungs, kidneys, and nervous system. Mercury that penetrates the skin or is ingested can also be harmful. If mercury is inhaled, penetrates the skin, or is ingested accidentally, seek emergency medical treatment immediately.

If the UV lamp bursts and releases mercury, the following precautions should be observed to minimize the risk of exposure to mercury:

- Always wear gloves and safety glasses when handling or replacing a UV lamp.
- Leave the area immediately to avoid inhalation of the mercury vapor.
- Thoroughly ventilate the area for at least 30 minutes or until the mercury vapor concentration is in compliance with applicable federal and local health and safety regulations.
- After handling a broken or burst UV lamp, carefully remove gloves, and then wash hands thoroughly with soap and water. Collect all pieces of the broken lamp and dispose of them as hazardous waste. Follow all applicable federal and local health, safety, and environmental regulations.
- Do not turn on or operate the system until all mercury contamination has been cleaned up and removed.
- An established Hazard Response Plan designed to deal with UV exposure and mercury contamination should be made available to all personnel associated with the Atlantium system.

It is important to exercise extreme caution when handling and using UV lamps:

- Do not use a UV lamp that shows any scratches, cracks, or other damage.
- Do not touch the UV lamp with bare hands.
- If the body of the UV lamp is touched accidentally, then clean the fingerprints off with alcohol and wipe dry with a soft, clean, lint-free cloth. Do not use cleaning rags or materials that can leave a residue.
- When handling the UV lamp, always place it on a flat surface or table, so that it is not accidentally damaged.

UV Lamp Disposal

Federal and local regulations may prohibit operators from disposing of lamps containing mercury. Atlantium cannot advise operators about their general or specific local or federal environmental and hazardous waste regulations.

A used, non-ruptured UV lamp should be repackaged using the packaging of the replacement lamp and shipped back to Atlantium (or to your Atlantium distributor). Reusing the replacement packaging will protect the lamp from being ruptured during storage and/or transport.

System Safety Features

UV Protective Seal

Each lamp is enclosed within a sealed lamp chamber that prevents the UV light from escaping outside the reactor.

Emergency Stop Button

An Emergency Stop button is located on the front panel of the electrical cabinet.

In the event of an emergency, the system can be shut down immediately by pushing the emergency stop button.

To restore operation, rotate the button clockwise until it pops out and then follow the System Startup procedure to restart the system.

Software Safety Controls

When the system is started, the Atlantium software performs a series of internal self-testing routines. If the system passes these tests satisfactorily, system operation can commence.

If the system **does not** pass these tests satisfactorily, UV lamp operation is disabled until the problem is resolved.

If problems arise during normal operation, appropriate error messages with varying levels of severity will be generated on the touch-screen control panel.

SCHEMATIC DIAGRAMS

The following pages display schematic diagrams and modular layouts of the Atlantium system's reactors and electrical cabinets.

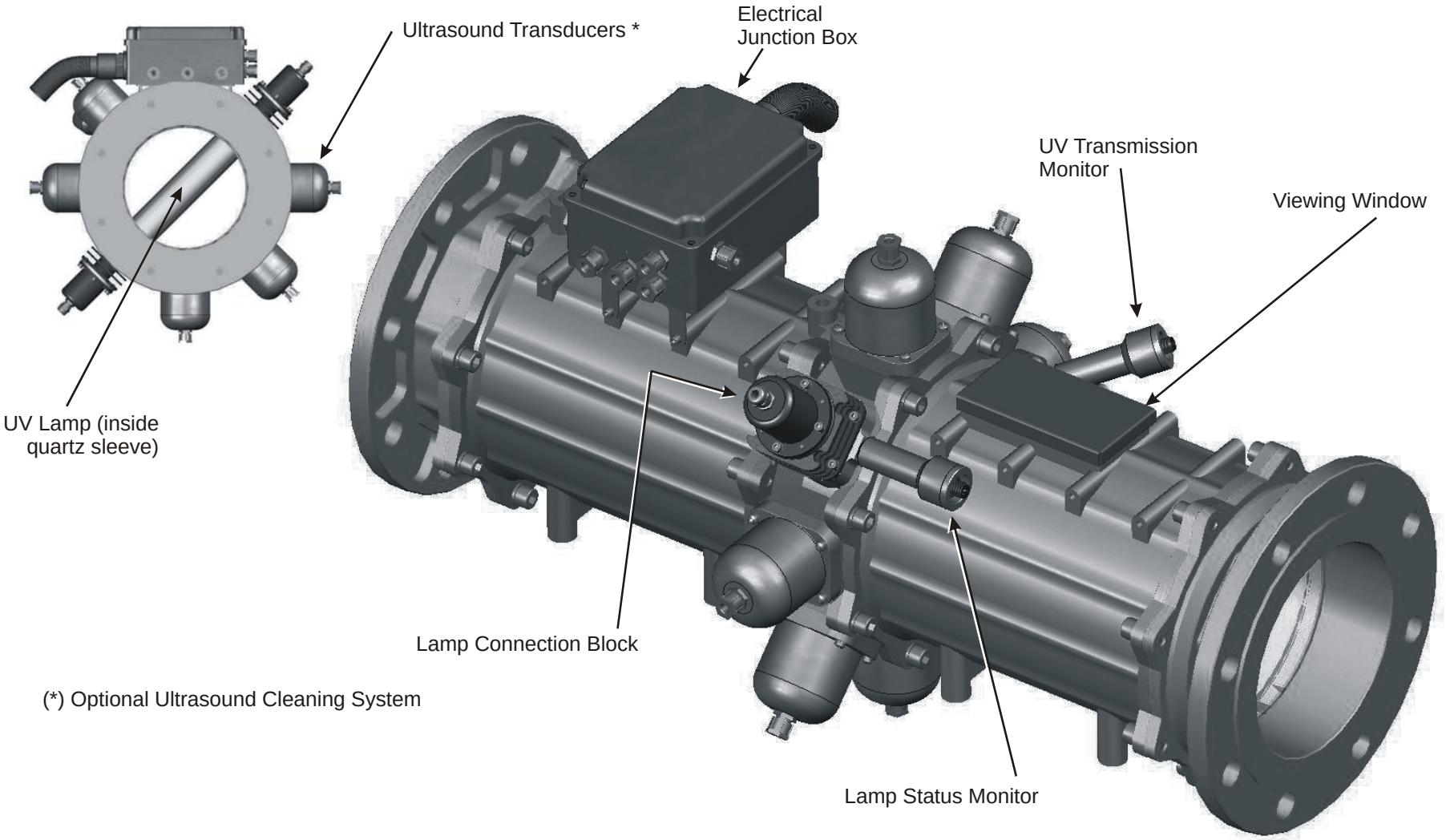

Figure 16: Atlantium RZ163-11 Reactor Schematic Diagram (Single Branch / Single Lamp)

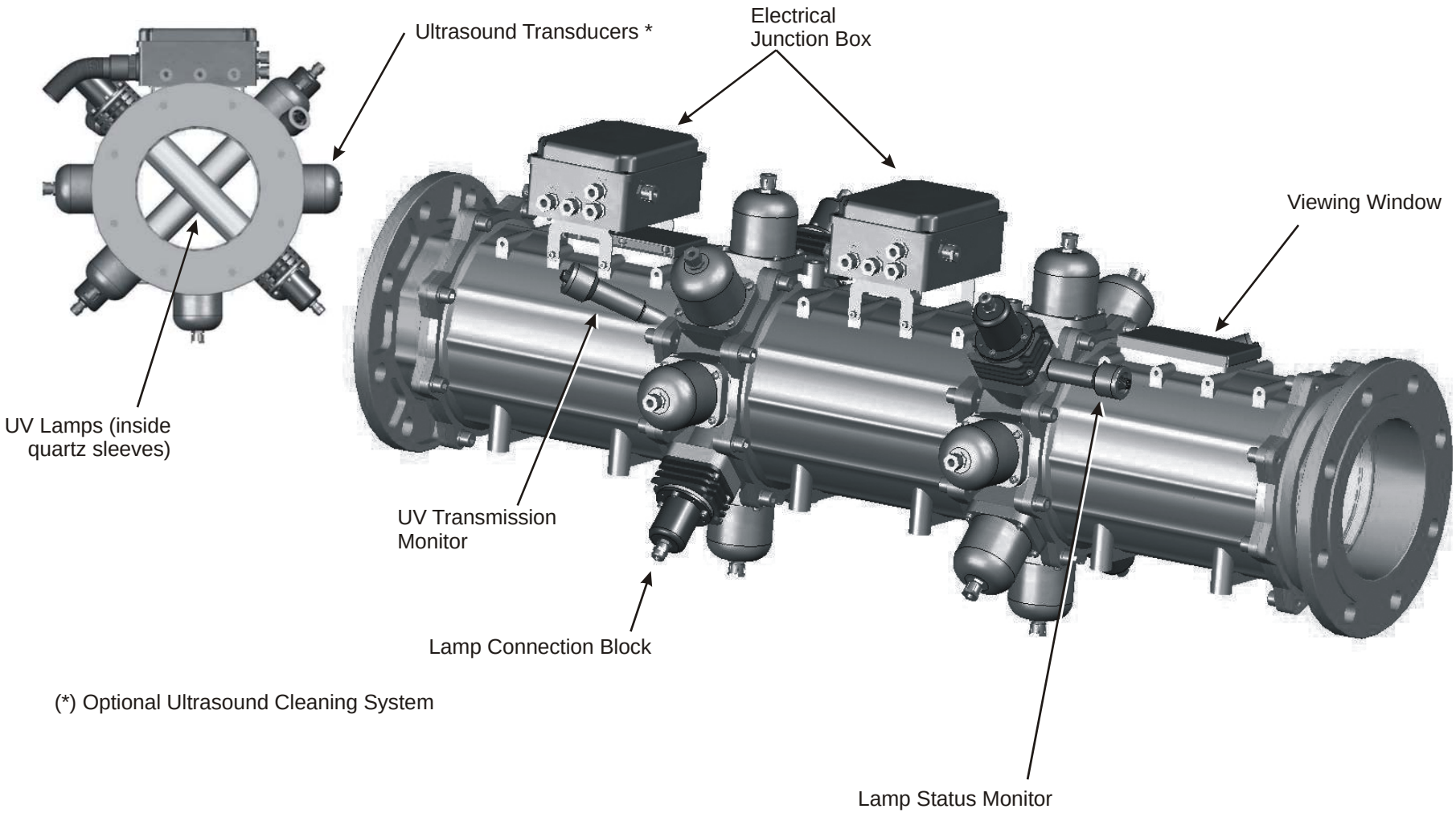

Figure 17: Atlantium RZ163-12 Reactor Schematic Diagram (Single Branch / Two Lamps)

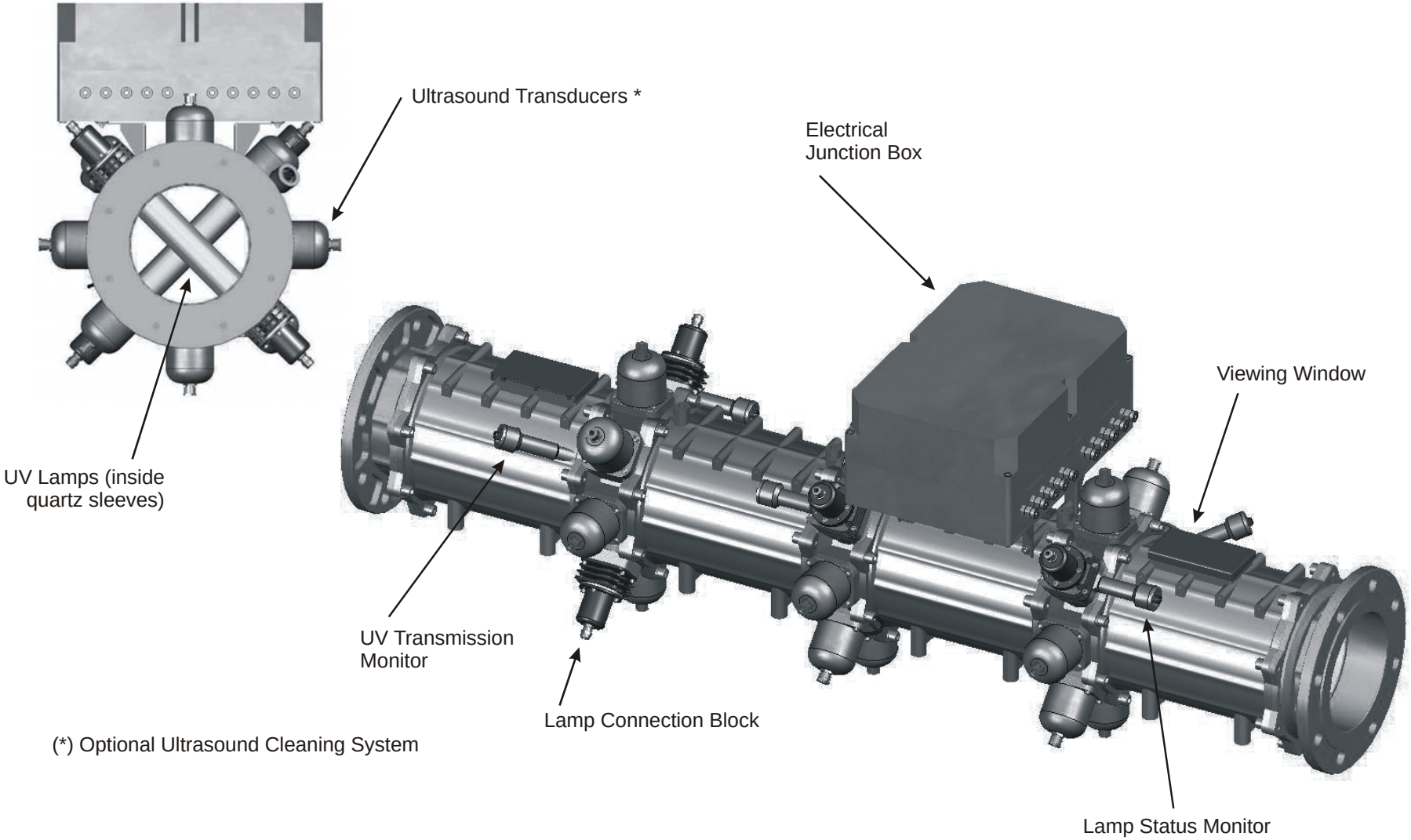

Figure 18: Atlantium RZ163-13 Reactor Schematic Diagram (Single Branch / Three Lamps)

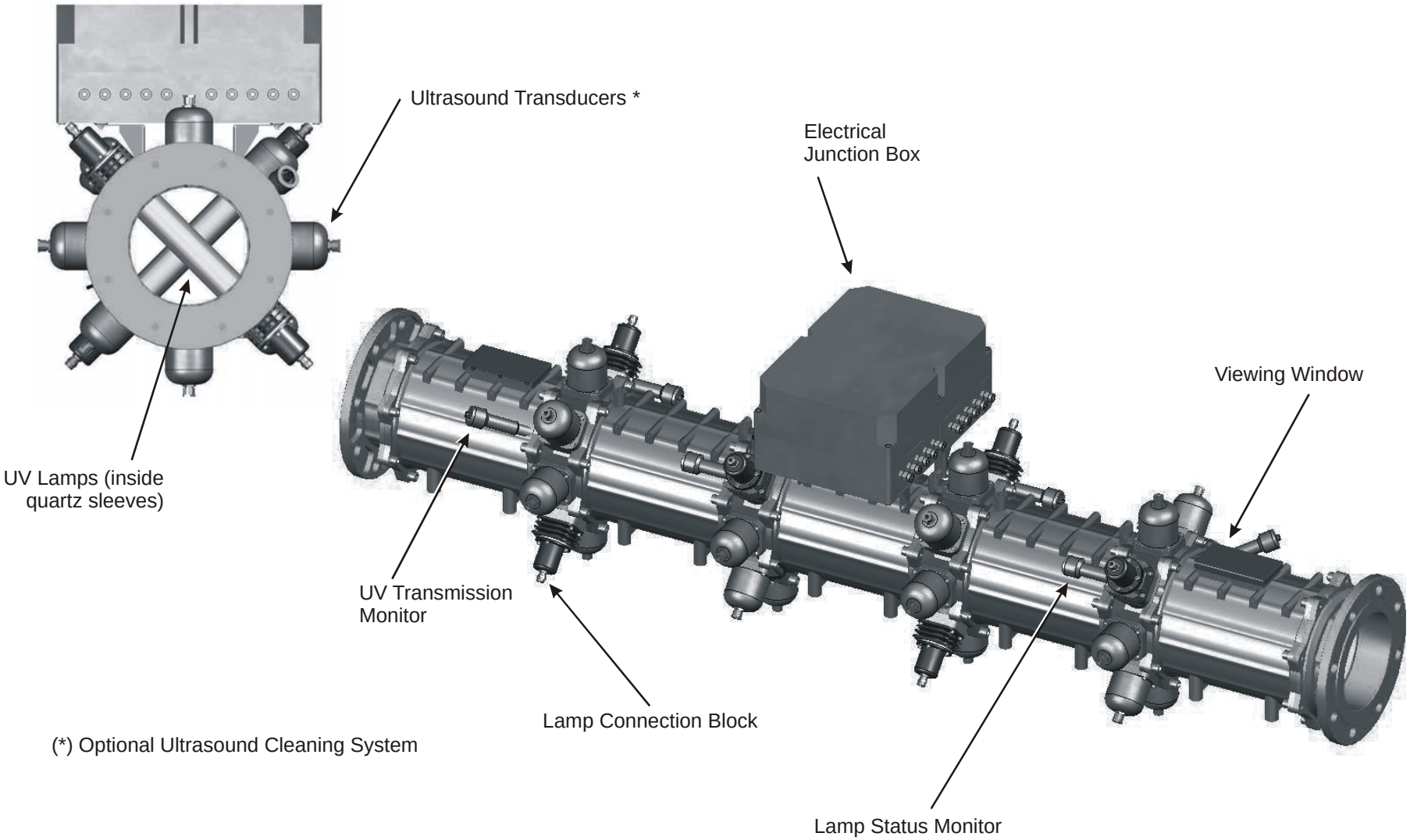

Figure 19: Atlantium RZ163-14 Reactor Schematic Diagram (Single Branch / Four Lamps)

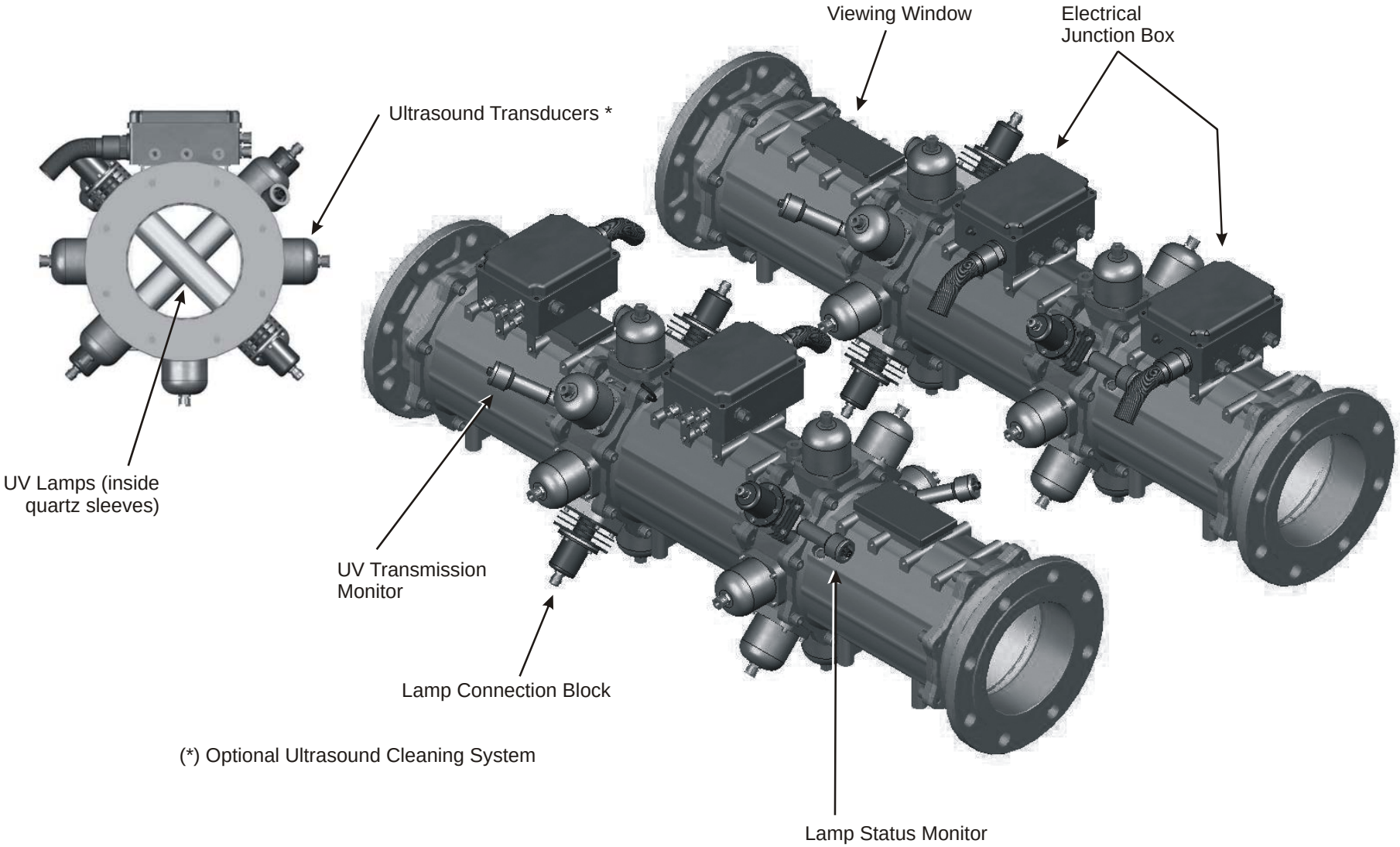

Figure 20: Atlantium RZ163-22 Reactor Schematic Diagram (Dual Branch / Four Lamps)

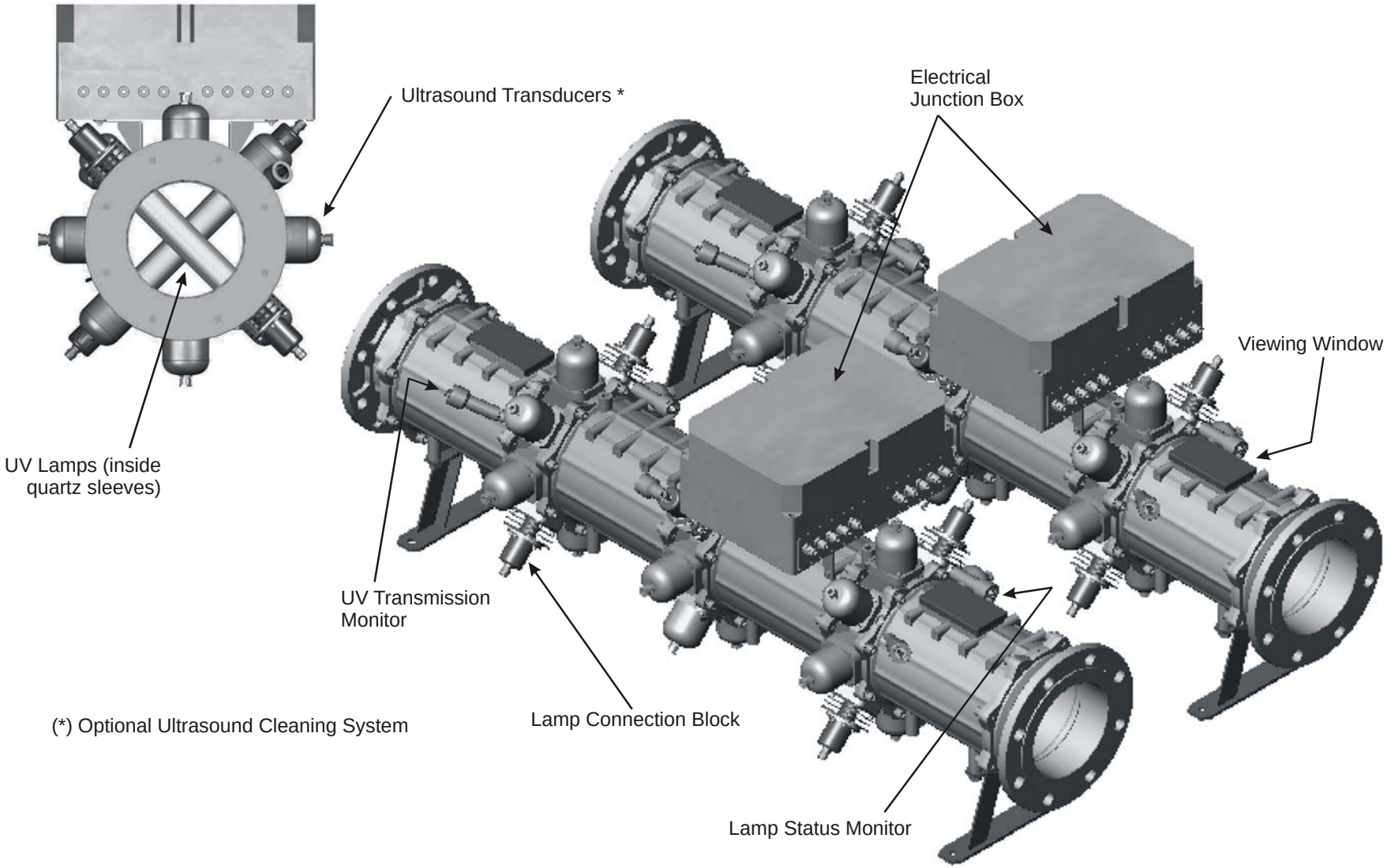

Figure 21: Atlantium RZ163-23 Reactor Schematic Diagram (Dual Branch / Six Lamps)

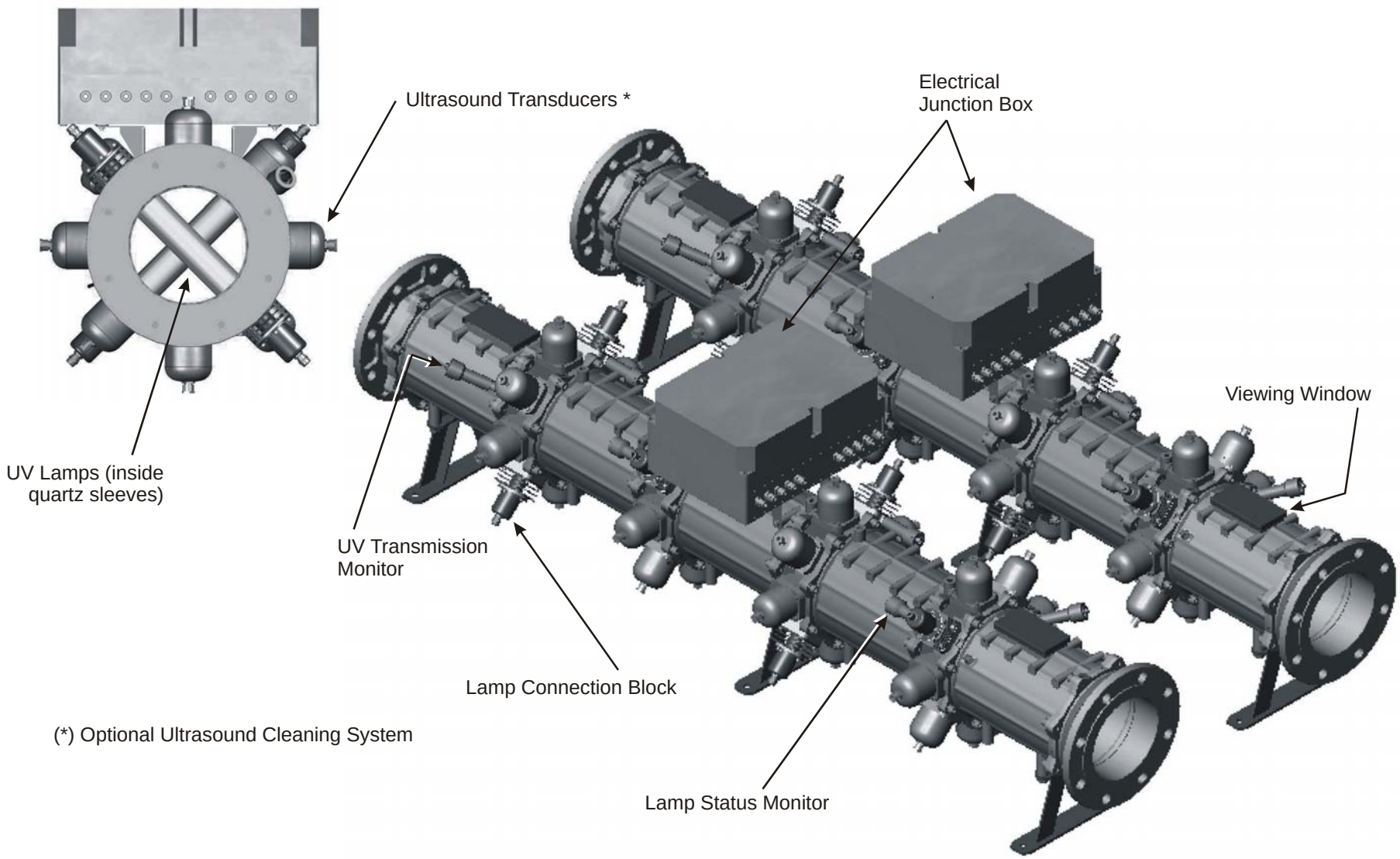

Figure 22: Atlantium RZ163-24 Reactor Schematic Diagram (Dual Branch / Eight Lamps)

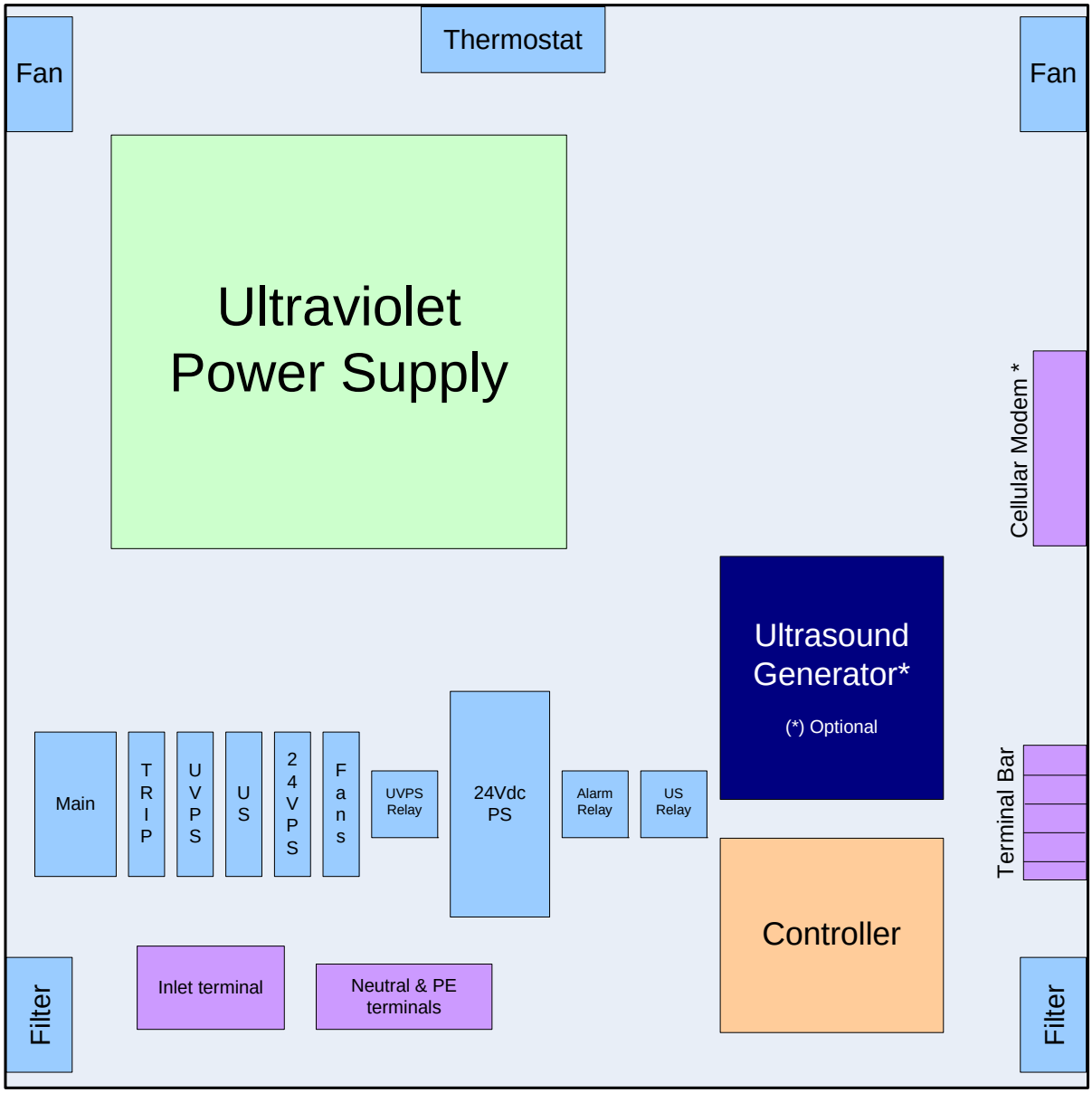

Figure 23: Atlantium Electrical Cabinet – Modular Layout: Reactors RZ163-11/12

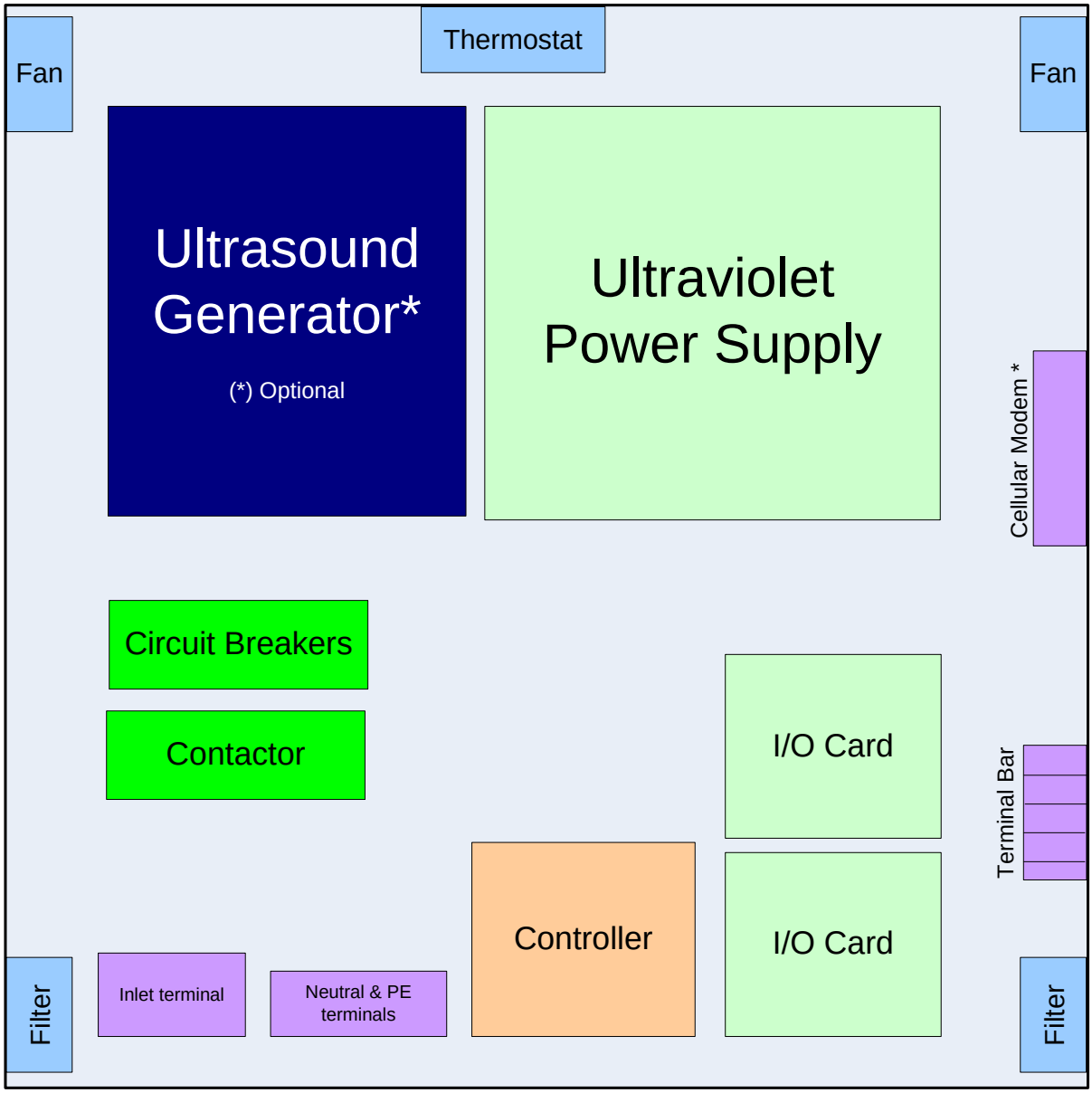

Figure 24: Atlantium Electrical Cabinet – Modular Layout: Reactor RZ163-13

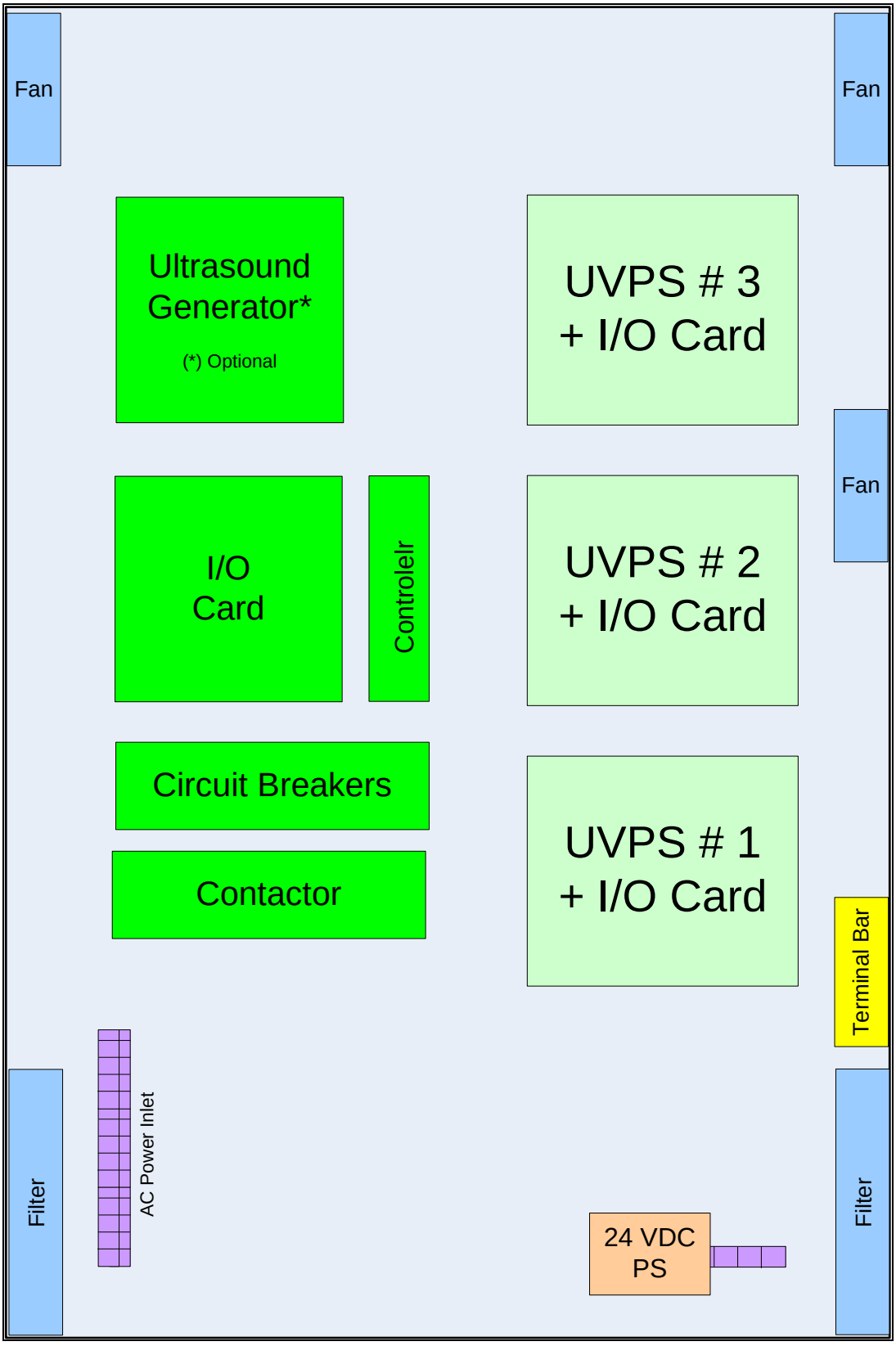

Figure 25: Atlantium Electrical Cabinet – Modular Layout: Reactors RZ163-14 through 24